SPDU017

XDS/22 Installation and Operation Guide

XDS Extended Development Support

TEXAS INSTRUMENTS

PREFACE

This manual is to be used by a trained technician to install and set up the XDS (Extended Development Support System). Instructions for installing the emulator board sets in the XDS package are covered in this manual. Installation instructions are given for setting up the XDS in the stand alone mode, connecting it to a host computer system, and operating it in the diagnostic mode. Operator instructions are also given in this manual, the user should have a working knowledge in the operation of computer and electronic equipment.

Section 1 provides general information and specifications for the XDS. Section 2 provides installation instructions for the XDS. Section 3 provides user instructions, and Section 4 outlines preventive maintenance functions.

Information related to the material discussed in this manual is found in the following publications.

Title	Part Number	Lit. No.
XDS/22 TMS9995 Emulator User's Guide	1603433-9701	SPDU002
XDS/22 TMS99000 Emulator User's Guide	1603435-9701	SPDU011
XDS/22 TMS32010 Emulator User's Guide	1603436-9701	SPDU015

IMPORTANT NOTICE

Texas Instruments reserves the right to make changes at any time in order to improve design and to supply the best product possible.

Texas Instruments assumes no responsibility for infringement of patents or rights of others based on Texas Instruments applications assistance or product specifications, since TI does not possess full access to data concerning the use or applications of customer's products. TI also assumes no responsibility for customer product designs.

Copyright © 1983 Texas Instruments Incorporated

XDS INSTALLATION AND OPERATION GUIDE

TABLE OF CONTENTS

SECTION			PAGE
1.	GENERAL INFORMATION		
	1.1	Introduction	1-1
	1.2	System Features	1-2
	1.3	System Block Diagram	1-2
	1.4	System Specifications and Requirements	1-3
		1.4.1 Environmental Requirements	1-3
		1.4.2 Power Requirements	1-3
		1.4.3 DC Power Supply Specifications	1-4
		1.4.4 Physical Characteristics	1-4
2.	HARDWARE INSTALLATION		
	2.1	Unpack and Assembly	2-1
		2.1.1 Visual Inspection	2-1
		2.1.2 Assembly	2-1
	2.2	Connections and Setup of the EIA Interface	2-4
		2.2.1 EIA Port Configuration	2-4
		2.2.2 EIA Port C - Log Device Connection	2-12
		2.2.3 EIA Port C - ROM Blower Connection	2-12
		2.2.4 Jumper Connection For Reset in Multi-Processor Mode	2-13
	2.3	Back Panel Connections	2-14
		2.3.1 Stand-Alone Mode Connections	2-14
		2.3.2 Connection to a Host Computer	2-16
		2.3.2.1 Host System Requirements	2-16
		2.3.2.2 Hardware Requirements	2-17
		2.3.3 Logging Device Connection	2-17
		2.3.4 Multi-processor Connections	2-18
		2.3.5 Diagnostic Mode Connections	2-18
	2.4	System Grounding	2-20
	2.5	Power Connection and Conversion	2-20
	2.6	Installation Completion	2-21
3.	OPERATION		
	3.1	Controls and Indicators	3-1
		3.1.1 Power Switch	3-1
		3.1.2 Power Indicator Light	3-1
		3.1.3 Reset Switch	3-1
		3.1.4 Status Indicator Lights	3-1
	3.2	Stand-Alone Mode	3-1
	3.3	Multiprocessor Mode	3-1
	3.4	Diagnostic Mode	3-3
	3.5	Host Computer Mode	3-3
	3.6	Target Connector	3-3
	3.7	Power-up Sequence	3-3
	3.8	Additional Reading	3-3

PAGE

4. PREVENTIVE MAINTENANCE
- 4.1 Preventive Maintenance 4-1
- 4.2 Cleaning the Cabinet 4-1
- 4.3 Cleaning the Air Filter 4-1
- 4.4 Power Supply Voltage Check 4-3
- 4.5 Replacing the System Fuse 4-3
- 4.6 Replacing the Power Supply Fuse 4-5
- 4.7 Replacing Front Panel Lamps 4-7

APPENDICES

A. Schematics A-1
B. XDS Connections to Various Computer Systems and Terminals B-1

1. GENERAL INFORMATION

1.1 INTRODUCTION

The XDS is shown in Figure 1-1. The XDS is designed as a development tool to be used with the Texas Instrument family of emulator board sets. The target connector on the XDS connects to the customers system under development in place of the Texas Instrument microprocessor. The XDS has four EIA ports for interfacing the unit to a stand-alone terminal, a host computer for down loadingthe emulator, a logging device and for future expansion.

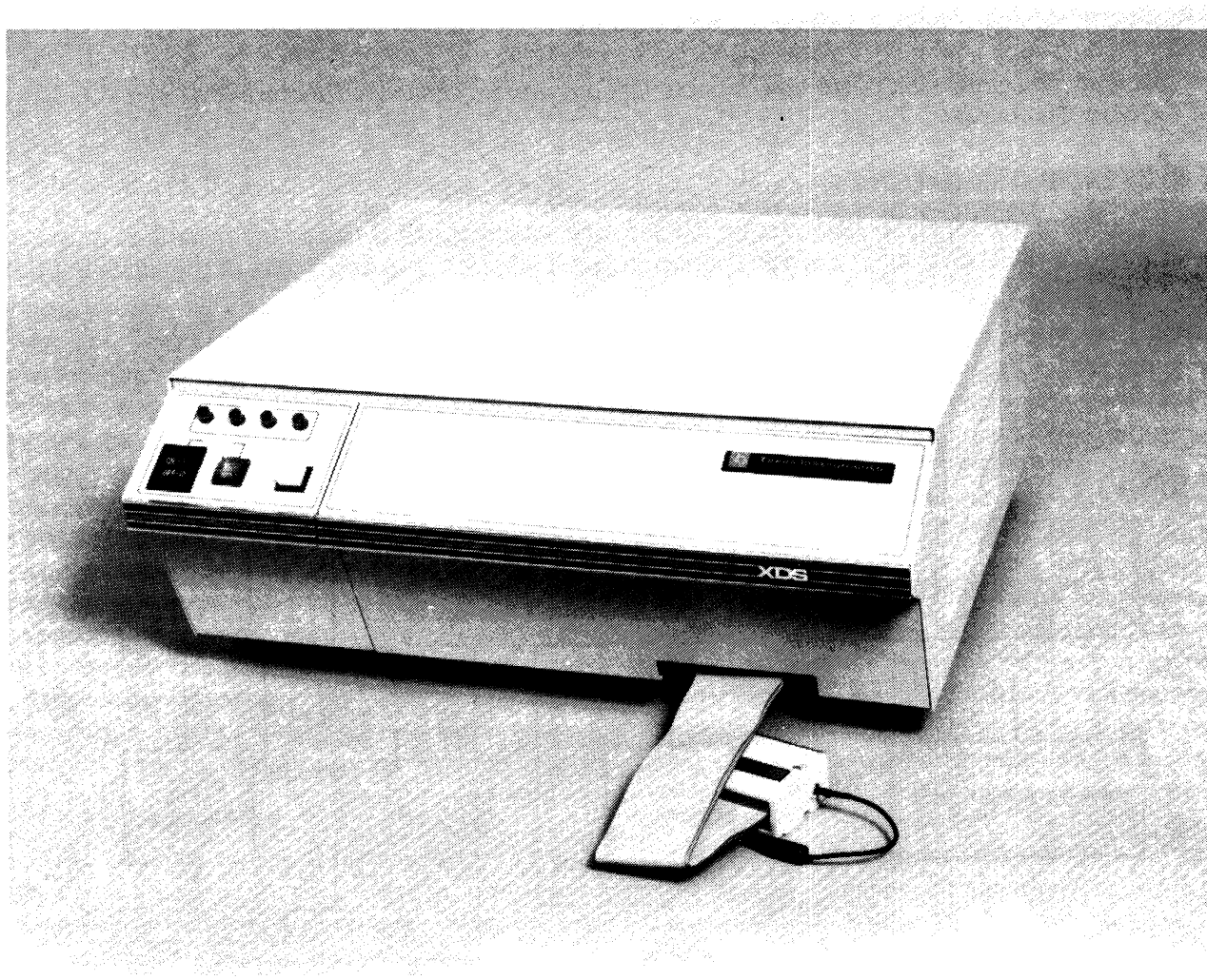

FIGURE 1-1. XDS UNIT

1.2 SYSTEM FEATURES

The XDS is an advanced concept in Texas Instruments microprocessor and microcomputer development systems. The key features of the system are:

1. Reduction of user dependance on expensive host computers.

2. Self-contained, modular, reconfigurable system to support multiple Texas Instruments' microprocessor and microcomputer chip designs.

3. Low-cost entry into microsystem development.

4. Upgradeable at time of purchase or at a later date.

5. Diagnostic support via telephone communications link by Texas Instruments Regional Technology Center Personnel.

1.3 SYSTEM BLOCK DIAGRAM

The basic building blocks of the XDS are the XDS chassis which contains the emulator boards, the target connector and optional boards. The block diagram shown in Figure 1-2 gives an idea of the makeup for the XDS.

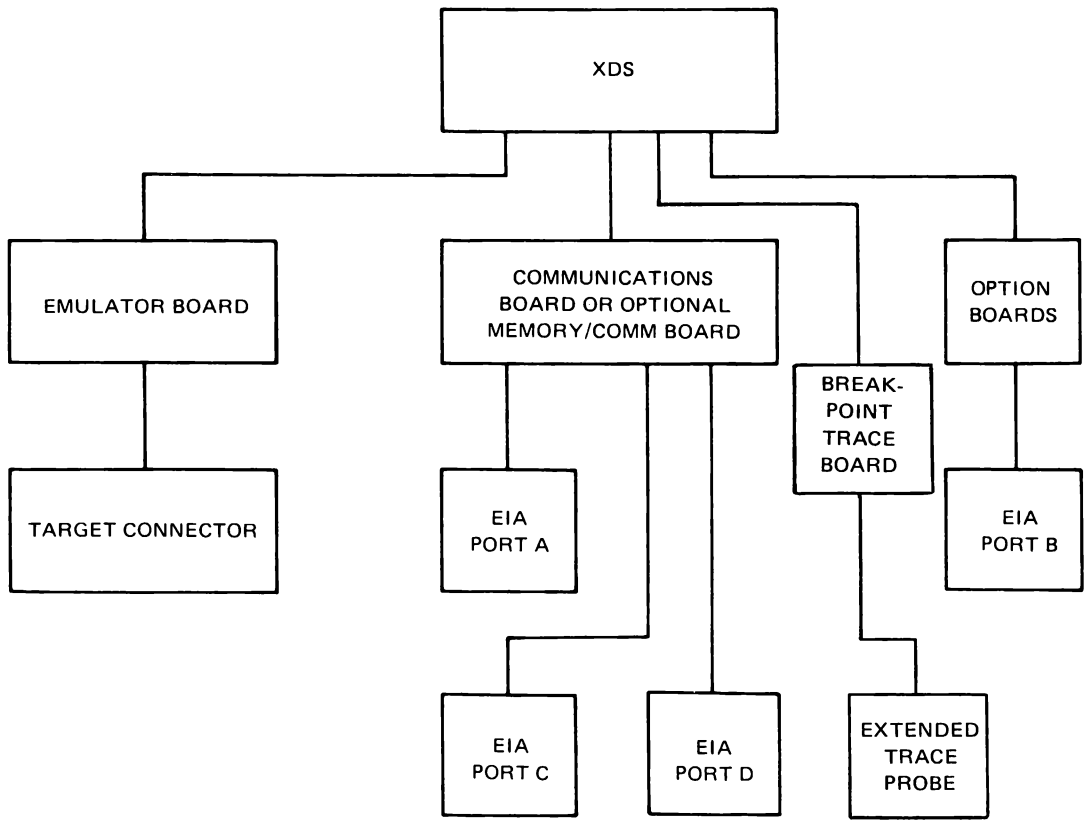

FIGURE 1-2. XDS BLOCK DIAGRAM

1.4 SYSTEM SPECIFICATIONS AND REQUIREMENTS

1.4.1 Environmental Requirements.

The XDS will work well in an ordinary air-conditioned laboratory environment because the system has its own air-circulation fan. The optimum ambient temperature for the system is 72° F (22° C) with 50% relative humidity. System specifications allow operation over a wider range of temperature and humidity, but reliability and system lifetime are greatly enhanced by keeping the system ambient temperature and humidity near the ideal operating point. Consult Table 1-1 for temperature and humidity specifications. Drastic changes in the temperature affect the system's operation. Do not expose the system to temperature changes greater than 12° F/hour (6.6° C/hour). The relative humidity also affects the system operation if the atmosphere becomes overly dry or damp. Low relative humidity conditions are ideal for static discharges which can cause a fault in the system operation or even destroy some semiconductor devices. In low humidity climates, use static suppression measures such as raising the humidity with humidifiers in the site air-conditioning system. Proper grounding of equipment also reduces static hazards.

TABLE 1-1. XDS SPECIFICATIONS

OPERATING SPECIFICATIONS	
Temperature	60 degrees to 90 degrees F 16 degrees to 32 degrees C
Humidity	30% to 80%
STORAGE SPECIFICATIONS	
Temperature	– 40 degrees to 185 degrees F – 40 degrees to 85 degrees C
Humidity	5% to 90% noncondensing

1.4.2 Power Requirements.

The XDS can be connected to most available power sources. There should be no electric motors (pencil sharpeners, copiers, typewriters), fluorescent lights, or power tools connected to the same circuit as the emulator. Consult Table 1-2 for power requirements.

TABLE 1-2. XDS POWER REQUIREMENTS

Rated Voltage (±10%)	Rated Frequency	Rated Current AMPS	NEMA Wall Receptacle
100 Vac	50/60	3	5-15R
115 Vac	60	3	5-15R
220 Vac	50	2	Schuko 1050
240 Vac	50	2	BSI 1363

1.4.3 DC Power Supply Specifications.

The DC power supply voltage and current available for use in the XDS are given in Table 1-3. When installing option boards in the XDS, their current requirements should be figured into the total loading required of the power supply so that the XDS power supply is not overloaded. Reference the manuals for all the boards installed in the XDS and calculate the total DC power requirements and ensure that it is less than the total DC power available.

TABLE 1-3. XDS CHASSIS DC POWER AVAILABILITY (MAX)

+5 VOLTS (AMPS)	+12 VOLTS (AMPS)	−12 VOLTS (AMPS)
13.0	2.0	1.5

1.4.4 Physical Characteristics.

The XDS is a professionally styled table-top size unit suitable for most work surfaces. The XDS has an air inlet on each side of the unit and an air exhaust port on the rear of the unit. A minimum of five inches clearance must be maintained between the XDS and neighboring equipment on the sides and rear so that air flow is not inhibited.

CAUTION

DO NOT BLOCK AIR INLETS OR AIR EXHAUST PORT, THIS MAY CAUSE THE XDS TO OVERHEAT AND DAMAGE THE ELECTRONIC CIRCUTS.

Table 1-4 gives the physical dimension and weight of the unit.

Table 1-4. XDS Physical Characteristics

DIMENSIONS
WIDTH = 17.0 INCHES (43.2 CM) DEPTH = 16.5 INCHES (41.9 CM) HEIGHT = 7.4 INCHES (18.8 CM) TARGET CABLE = 18 INCHES (46 CM)
CLEARANCE REQUIREMENTS
SIDES – 5 INCHES MINIMUM (15.2 CM) BACK – 5 INCHES MINIMUM (15.2 CM) TOP – NONE REQUIRED FRONT – NONE REQUIRED
WEIGHT
32 POUNDS (14.4 KG)

2. HARDWARE INSTALLATION

2.1 UNPACK AND ASSEMBLY

CAUTION

WHEN LIFTING THE XDS, GRASP THE INSTRUMENT FROM THE SIDES AND BOTTOM. DO NOT ATTEMPT TO LIFT THE INSTRUMENT BY THE FRONT PANEL, DECORATING TRIM OR THE CONNECTORS ON THE BACK PANEL.

Remove the XDS from the shipping container. Retain all packing material. Visually inspect the unit for signs of shipping damage. If the unit has been damaged, contact the carrier at once.

WARNING

DO NOT CONNECT THE XDS TO A POWER SOURCE UNTIL THE INSTALLATION PROCEDURE IS COMPLETE.

2.1.1 Visual Inspection.

Remove the front panel and inspect the card case to ensure that all cards are seated. To remove the front panel perform the following steps.

1. Locate and loosen the two thumb screws located on the bottom section of the front panel, reference Figure 2-1 for screw location. Note that the thumb screws are retained in the front panel. Use a flat blade screwdriver to loosen the screws.

2. Pull the bottom of the front panel away from the instrument while applying slight upward pressure on the front panel. Rotate the front panel away from the instrument until the bottom of the front panel clears the target cable clamp hardware. When the bottom of the front panel is clear of the target cable clamp hardware allow the front panel to drop enough to clear the lip at the top of the instrument.

3. Set the front panel aside so that the chassis configuration diagram may be referenced.

4. Remove cardboard printed circuit board stabilizer and retain with other packing material. See Figure 2-4 for stabilizer location.

5. Press the board ejectors to ensure all printed circuit boards are firmly seated in the chassis.

2.1.2 Assembly.

Normally no assembly is required on the XDS if the emulator board set and option boards were ordered with the XDS. If circuit boards need to be installed or removed, follow the procedure in the following paragraph.

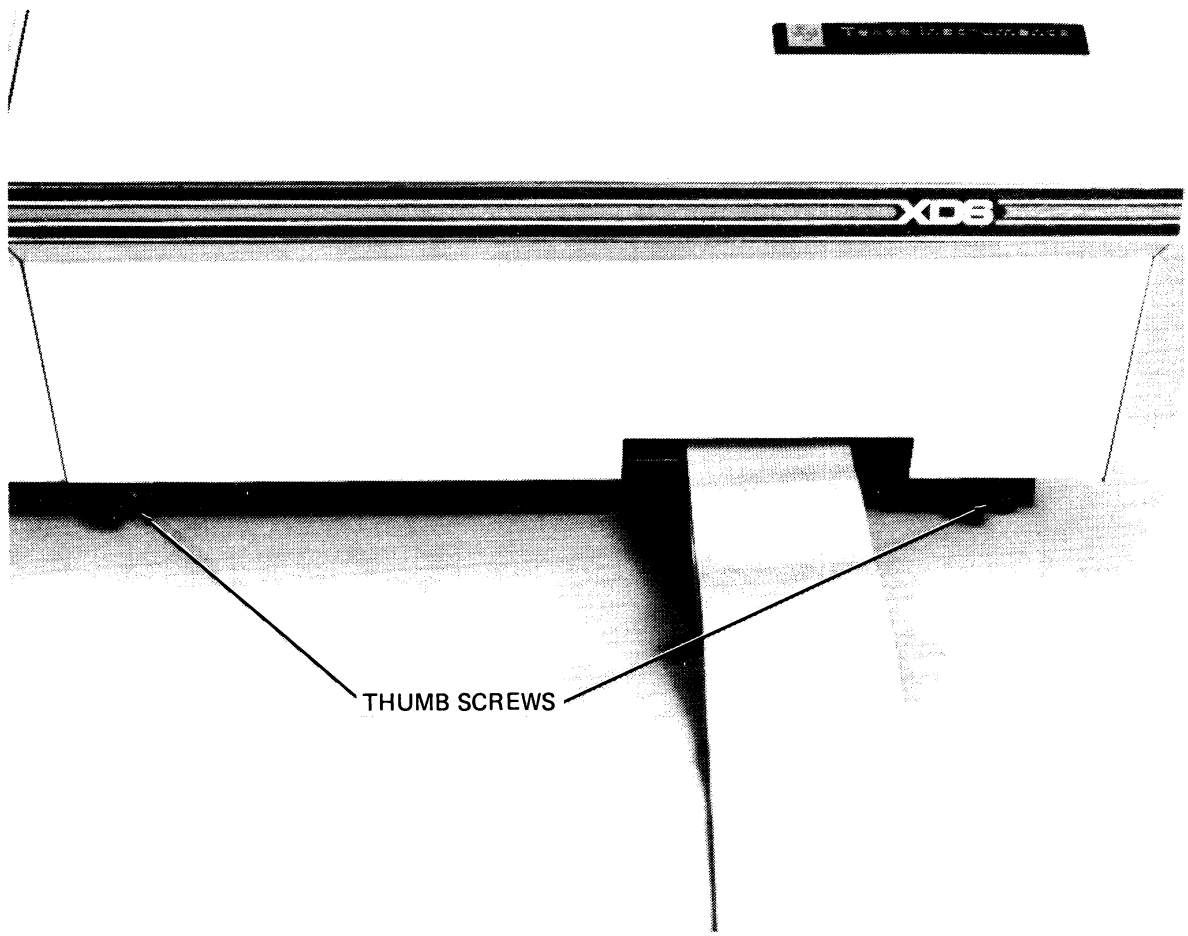

FIGURE 2-1. FRONT VIEW OF THE XDS

CAUTION

POWER MUST BE TURNED OFF BEFORE INSTALLING OR REMOVING CIRCUIT BOARDS.

2.1.2.1 Circuit Board Installation and Removal.

To install circuit boards in the XDS, remove the XDS front panel per instructions. Install the circuit boards, component side up, in the appropriate slot, reference Figure 2-2 for slot location. Slots 1, 2 and 3 use ejector tabs.To install, place the board in the slot and push into the card case until the outside edge of the ejector tab will fit into the small square hole at the side of the card case. Press the tab firmly against board until the board snaps into place. For the remaining boards, insert into the card case and press firmly into place. Refer to Figure 2-3 for ejector tab placement. If new boards are installed, note them on the chassis configuration label located on the back of the XDS front panel.

2.1.2.2 Breakpoint Trace Board.

The Breakpoint Trace Board must be installed before Emulator Board # 1 and removed after Emulator Board #1. The Breakpoint Trace board has an extended address cable which is held in place by the target cable clamp. Plug the extended address cable into the Breakpoint Trace board, after the board has been installed in the chassis. Fit the cable into the groove provided on the chassis cable mount. The extended trace cable is installed on the Breakpoint Trace Board when the board is shipped with the XDS. The extended trace probe is packed with the power cord. This installs on the extended trace cable and may be removed when not in use.

2.1.2.3 Target Cable Connector Assembly.

A small parts package is packed with the power card. It contains a spare 40 pin socket and clip lead for the target connector. It may be used as a replacement should the original be damaged. If additional sockets are required, replace with Augat PN 540-AG10D. The clip lead is to be used on the target connector for grounding. It may be used on either end of the target connector, whichever is closer to a ground connection.

2.1.2.4 Emulator Board #1.

When installing Emulator Board #1 the target cable must be secured in place with the target cable clamp. Place the clamp, which is attached to the cable, on the chassis cable mount so that the thumbscrews line up with the screw holes in the chassis. If an extended address cable is installed from the breakpoint trace board, it must be in the groove provided on the chassis cable mount before the target cable clamp is installed. Reference Figure 2-4 for target cable clamp configuration. Secure the clamp with thumbscrews. Do not over tighten.

2.1.2.5 Memory Expansion and Communications Board.

The memory expansion and communications board performs two functions. The communications function provides the EIA interface for ports A, C, and D. This function is standard for all XDS systems. Secondly the memory expansion function is optional on some systems and will be included as part of the board when ordered with the system. If memory expansion is to be added at a later date then the standard board with only the communications function is replaced by the new board with memory expansion and the communications function. The TI part number for these boards are 2311050-0002 for communications only and 2311050-0001 for memory expansion and communications. The memory expansion and communications board contain four sets of dip switches that must be set before the board is installed in the instrument.

Reference the paragraph on Connections and Set Up of the EIA Interface for information on setting these switches. When installing the memory expansion and communication board, there are three cables that must be connected to the front of the board. These cables are marked and must be connected to their corresponding connector. Figure 2-5 shows the cabling arrangement for the memory expansion and communication board.

The circuit cards in the XDS may be removed by pulling the ejector tab away from the card toward the side of the card case. Slide the card out of the card case. If boards are removed or replaced, note the change on the chassis configuration label.

Before removing the Emulator Board #1 the target cable strain relief assembly must be removed from the target cable mounting bracket. To remove the target cable strain relief assembly from the clamp, loosen the thumbscrews on the clamp. Refer to Figure 2-4 for target cable clamp configuration. After the cable is free, pull the ejector tabs toward the side of the card case, releasing the board from the mother board connector. Slide the board out of the chassis taking care that target cable is kept free of obstructions. Emulator Board #1 must be removed in order to remove the Breakpoint Trace board.

SLOT	CIRCUIT BOARD
7	TM990 (OPTIONAL)
6	TM990 (OPTIONAL)
5	TM990 (OPTIONAL)
4	MEMORY EXPANSION AND COMMUNICATIONS BOARD
3	EMULATOR BOARD #2 (Not used on all emulators)
2	EMULATOR BOARD #1
1	BREAKPOINT BOARD (OPTIONAL)

FIGURE 2-2. CARD CAGE BOARD PLACEMENT

2.2 CONNECTIONS AND SET UP OF THE EIA INTERFACE

The XDS memory expansion and communication board resides in slot 4 of the card case. If the memory expansion board is installed the communications circuit will be included with the memory expansion function on the board. The board is cabled to the EIA ports in the rear of the XDS chassis. The cable connections are shown in Figure 2-5. In the present configuration Port B is reserved for future expansion, Ports A and D are full duplex EIA ports and Port C is a full duplex EIA port which may be used for a logging device or other EIA equipment. Port C does not have selector switches to reconfigure the port; if required this must be done in the customers cable. Ports A and D may be configured to interface to a variety of EIA compatible equipment by selecting the required switch settings for each port. This saves having to reconfigure the cable for the EIA equipment. Port A is configured by switches S3 and S4, and Port D is selected by switches S1 and S2.

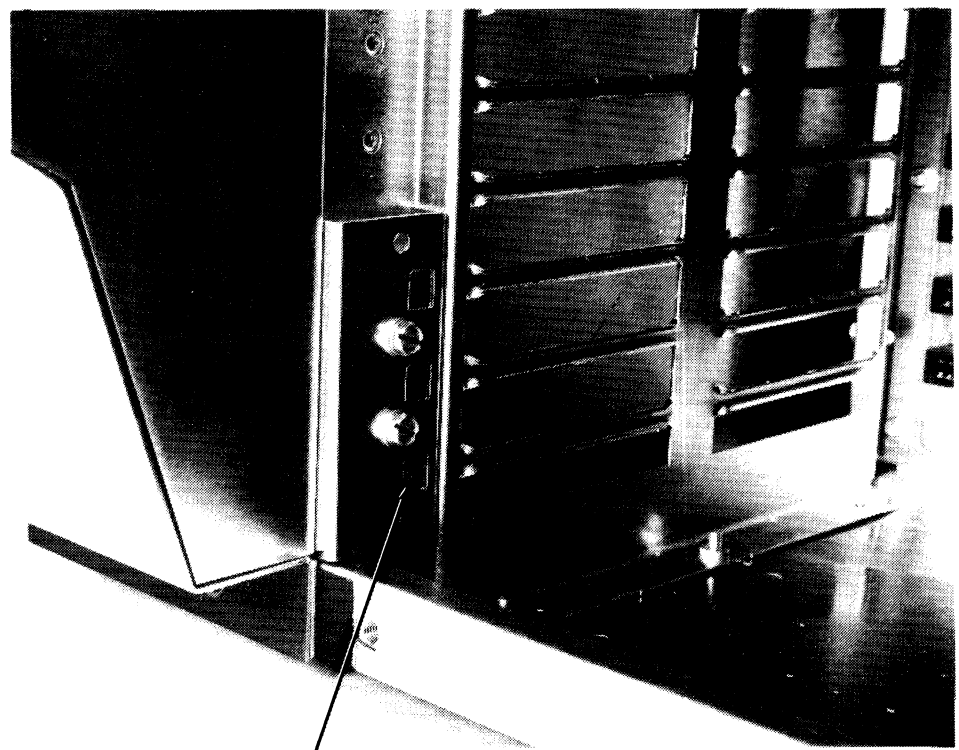

FIGURE 2-3. XDS CARD CASE

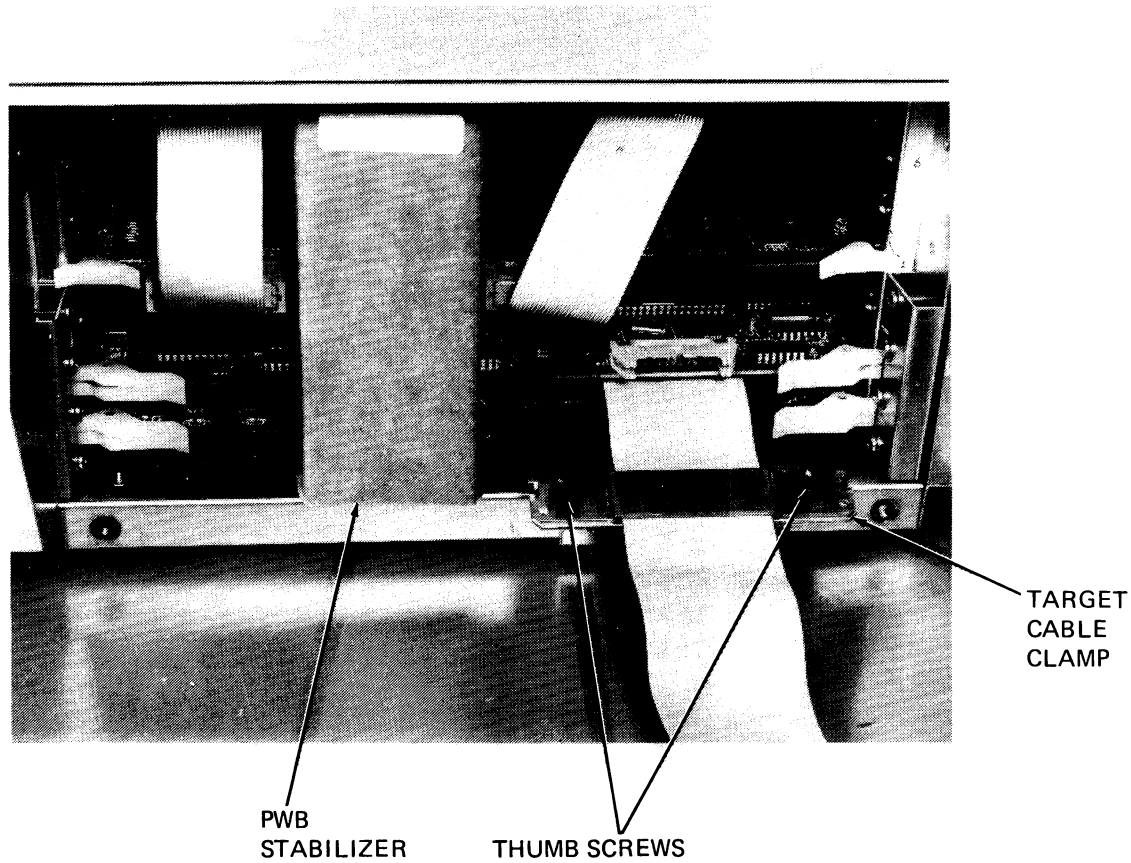

FIGURE 2-4. TARGET CABLE CLAMP

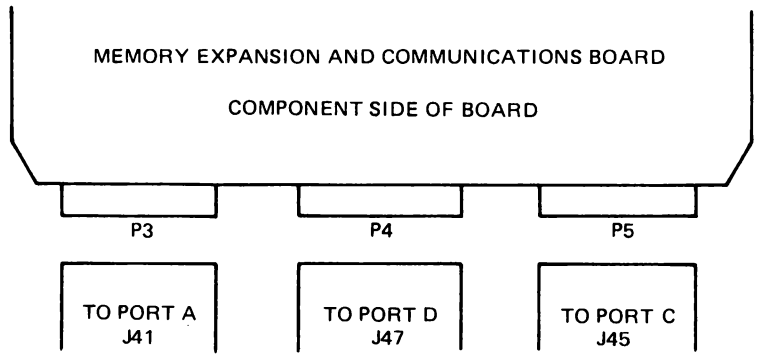

FIGURE 2-5. COMMUNICATIONS CABLE CONNECTIONS

There are no switches or jumper wires for setting baud rate for EIA Ports A, C and D. The baud rate for Port A is automatically set to the required rate of the terminal connected to the port. This auto baud feature is inacted by entering two carriage returns on the terminal keyboard after powering up the system, no further action is required. The baud rate for Ports C and D are selectable through the system software.

2.2.1 EIA Port Configuration.

EIA Ports A and D may be configured through switch settings as a data terminal or a data set for communication to a variety of devices. Figure 2-6 shows the switch selections available for ports A and D. The locations of the switches for the EIA ports are given in Figure 2-7. If changes in the EIA port switches are required, remove the board per instructions given in the previous paragraph 2.1.2.1. After the switches have been set, replace the board in the chassis and replace the cables as outlined in the paragraphs above. When connecting the XDS to a host computer or a terminal, consult the manual of the device being connected for information on the RS 232-C interface signals required and the pin assignment. Because there is a large number of EIA configurations, only two will be discussed in the following examples. Table 2-1 gives example switch settings for Port A to a typical CRT user terminal, Port D to a Texas Instruments DS 990 Computer via the EIA interface module, and settings required when the unit is in the multi-processor mode. The pin configuration for the EIA connectors is given in Table 2-2.

CAUTION

ENSURE THAT THE HOST EIA-PORT CONFIGURATION IS COMPATIBLE WITH THAT OF THE EMULATOR BEFORE APPLYING POWER TO EITHER DEVICE.

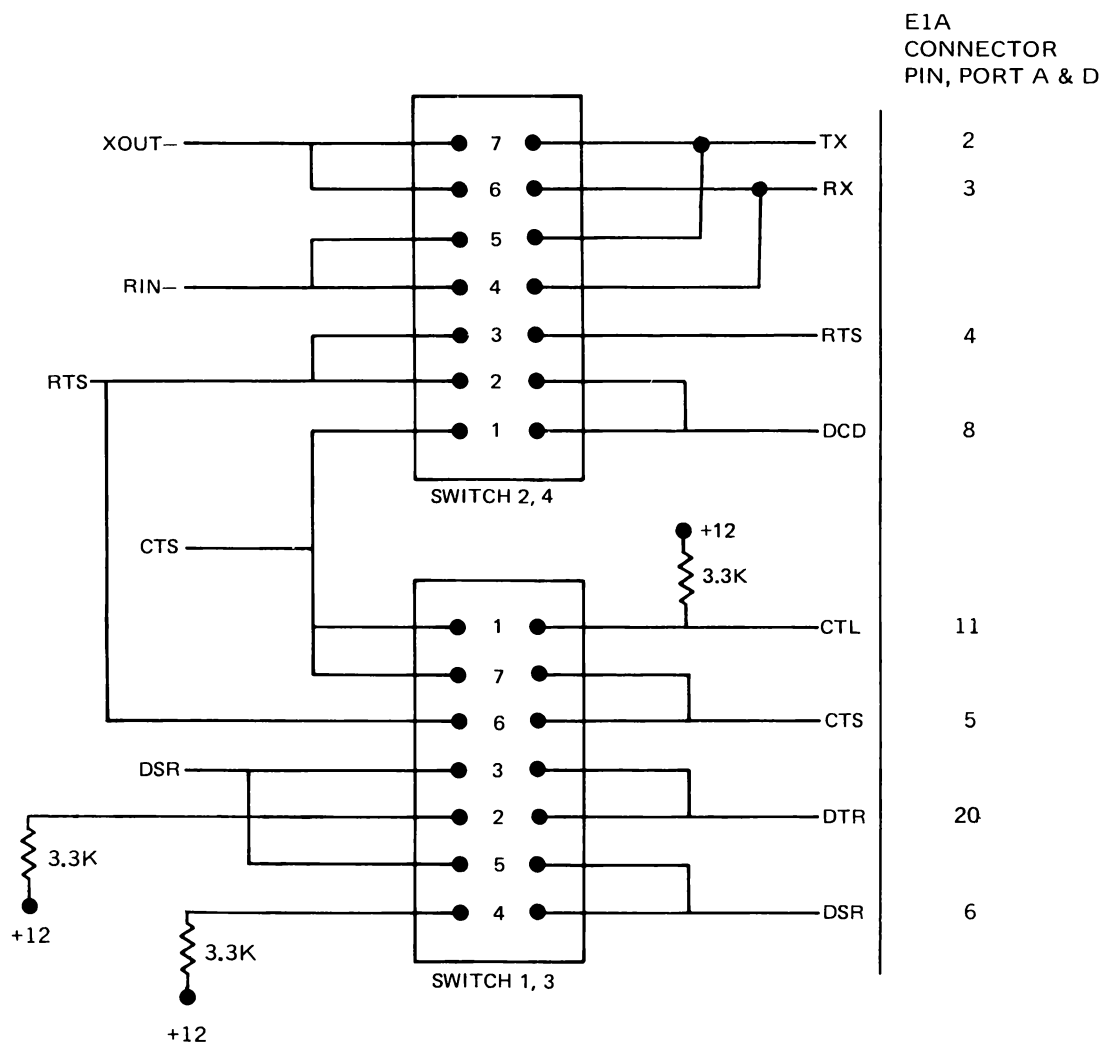

FIGURE 2-6. SWITCH OPTIONS FOR EIA PORT A AND D

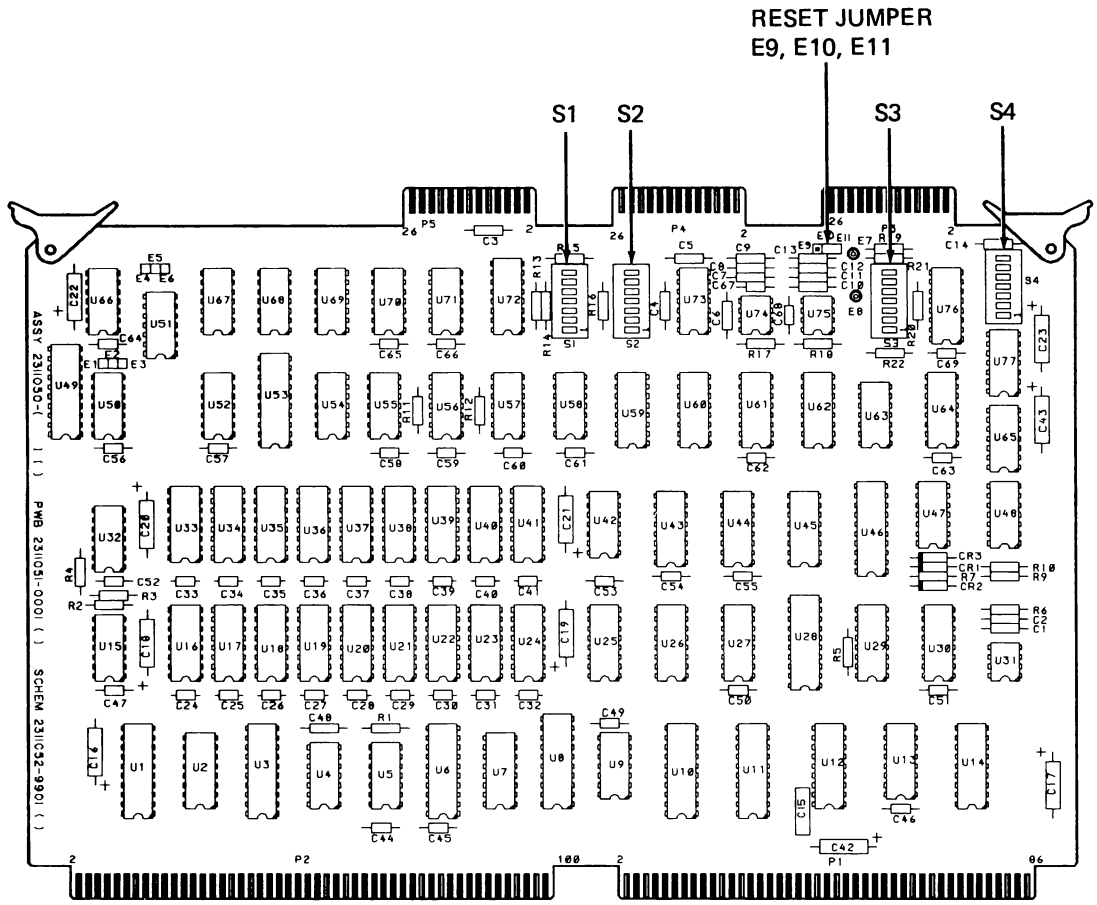

FIGURE 2-7. SWITCH LOCATIONS

TABLE 2-1. EXAMPLE SWITCH SETTINGS FOR PORTS A & D

SWITCH SETTINGS FOR PORT A

SWITCH LOCATION & NUMBER	TYPICAL CRT	MULTIPROCESSOR		
		FIRST UNIT	INTERMEDIATE UNIT	LAST UNIT
S4-7	0	0	0	0
S4-6	1	1	1	1
S4-5	1	1	1	1
S4-4	0	0	0	0
S4-3	0	0	0	0
S4-2	1	1	1	1
S4-1	0	1	0	0
S3-7	0	0	1	1
S3-6	1	0	0	0
S3-5	0	1	1	1
S3-4	1	1	1	1
S3-3	1	0	0	0
S3-2	1	0	0	0
S3-1	1	1	0	0

NOTE: 0 = OFF 1 = ON

SWITCH SETTINGS FOR PORT D

SWITCH LOCATION & NUMBER	TYPICAL HOST	MULTIPROCESSOR		
		FIRST UNIT	INTERMEDIATE UNIT	LAST UNIT
S2-7	1	1	1	1
S2-6	0	0	0	0
S2-5	0	0	0	0
S2-4	1	1	1	1
S2-3	1	0	0	0
S2-2	0	0	0	1
S2-1	0	1	1	1
S1-7	1	0	0	0
S1-6	0	1	1	0
S1-5	1	1	1	1
S1-4	1	1	1	1
S1-3	0	0	0	0
S1-2	1	1	1	0
S1-1	1	0	0	1

NOTE: 0 = OFF 1 = ON

TABLE 2-2. EIA CONNECTOR PIN OUT PORTS A, C & D

PIN NUMBER	SIGNATURE	PIN NUMBER	SIGNATURE
1	PE	14	NC
2	TX**	15	NC
3	RX**	16	NC
4	RTS**	17	RUN/HALT*
5	CTS**	18	NC
6	DSR**	19	NC
7	SG	20	DTR**
8	⁄DCD**	21	NC
9	NC	22	NC
10	NC	23	NC
11	CTL**	24	NC
12	NC	25	AMPLRST – *
13	NC		

NC = NO CONNECTION *Multiprocessor Mode ** Signature for Port A & B depends on switch settings.

The signatures for the EIA interface and the XDS side of the selection switches are defined in the following list. The RS-232-C standard circuit names are provided in parenthesis.

EIA Interface Signals

1. TX-Transmit Data (BA)-This signal is data to be transmitted from DTE equipment to DCE equipment.

2. RX-Received Data (BB)-This signal is data received from a DCE device to a DTE device.

3. RTS-Request to Send (CA)-This control signal originates from DTE equipment to force DEC equipment to make itself ready to receive data for transmission.

4. DCD-Data Carrier Detect (CF)-This line is presented to a terminal to affirm the presence of the carrier signal and to verify the correct operating conditions exist to allow transmission to data.

5. CTL-General Control (unassigned)-This line is available for use with equipment having the need to suspend transmission from the XDS when its input buffer is full. This line is held active until the device is able to accept more data, then it is released.

6. CTS-Clear to Send (CB)-This control signal is used to acknowledge that an RTS was recognized by an external device and that the device is ready to accept data from the XDS.

7. DTR Data Terminal Ready (CD)-This line is used to verify connection between the XDS and a transmit device. It reflects that the device is in operating condition and in a ready state.

8. DSR-Data Set Ready (CC)-This signal affirms connection of the port to a functional DCE type device such as a modem.

9. PE-Protective Earth (AA)-This is a chassis ground between the XDS and the external device.

10. SG-Signal Earth (AB)-This is the signal common between the XDS and an external device.

Signals on Instrument Side of Switches

11. XOUT – The EIA level data out of the XDS port to an external device.

12. RIN – Inbound EIA data to the XDS port from an external device.

13. RTS – A control signal used to notify the external device that the XDS port is ready to send outbound data.

14. CTS – This control signal is received from the external device and signifies that it is ready to accept data.

15. DSR – This control signal is used to enable the XDS port for communications. DSR must be at a LOGIC ONE (TRUE) level before exchange of data is possible.

2.2.2 EIA Port C-Log Device Connection.

Port C may be used to interface a logging device, such as a Texas Instruments 810 printer, to the XDS. The logging device must be RS-232-C compatible. Since Port C has no configuration switches, the user must construct an appropriate interface cable between Port C and the printer. Table 2-3 gives a wire list for the cable required for an 810 printer. The baud rate for the port will be set by the system software and the control of the log will be through system commands.

TABLE 2-3. CABLE FOR TEXAS INSTRUMENTS 810 PRINTER

XDS PORT C		810 PRINTER	
PIN	**SIGNATURE**	**PIN**	**SIGNATURE**
1	PE	1	PE
2	TX	3	RX
3	RX	2	TX
4	+ 12	6	DSR
5	CTS	11	SCA
7	SG	7	SG
8	+ 12	8	DCD

2.2.3 EIA Port C-ROM Blower Connection.

Port C, normally used for a logging device, may be connected to a RS 232-C compatible Prom Programmer. Using this host computer system to format an appropriate file, the user may then download that file to the Prom Programmer. Since Port C has no configuration switches, the user must construct and appropriate interface cable between Port C and the programmer. Table 2-4 gives a wire list for the cable required for a DATA I/O Model 19 Prom Programmer.

TABLE 2-4. CABLE FOR DATA I/O MODEL 19 PROM PROGRAMMER

XDS PORT C		DATA I/O	
PIN	SIGNATURE	PIN	SIGNATURE
1	PE	1	PE
2	TX	3	RX
3	RX	2	TX
4	RTS	5	CTS
5	CTS	4	RTS
7	SIGNAL GND	7	SIGNAL GND

For Data transfers to take place via Port C, the following minimum requirements must be met.

1. Baud rate must be made compatible. The baud rate for Port C is software programmable in the XDS.

2. Port C, Pin 5 clear to send must be active (HIGH).

Reference the appropriate Emulator Stand Alone Software Manual for information on commands for use with the Prom Programmer and Prom Programmer Format Support. XDS supports the following formats: TEK HEX, INTEL, MOTOROLA AND TI.

2.2.4 Jumper Connection For Reset In Multi-Processor Mode.

When two or more XDS units are connected in the multi-processor mode, a common reset line must be enabled. This may be selected for each unit by a jumper on the communication/memory expansion card. Refer to Figure 2-7 for jumper location. The comm reset line may be configured in two ways, Local Reset and Global Reset. The local reset configuration allows the emulator to be reset (with the reset button) and not affect the other emulators in the multiprocessor configuration. The global reset configuration allows the emulator to reset all emulators in the multiprocessor configuration regardless of the configuration of their reset line. Table 2-5 shows the jumper connectionson the communications/memory expansion board.

TABLE 2-5. JUMPER CONNECTIONS

JUMPER CONNECTIONS	RESET MODE
E10 – E11	LOCAL
E9 – E10	GLOBAL

2.3 BACK PANEL CONNECTIONS

The layout for the back panel of the XDS is shown in Figure 2-8. The cover plate is reserved for future expansion of the XDS.

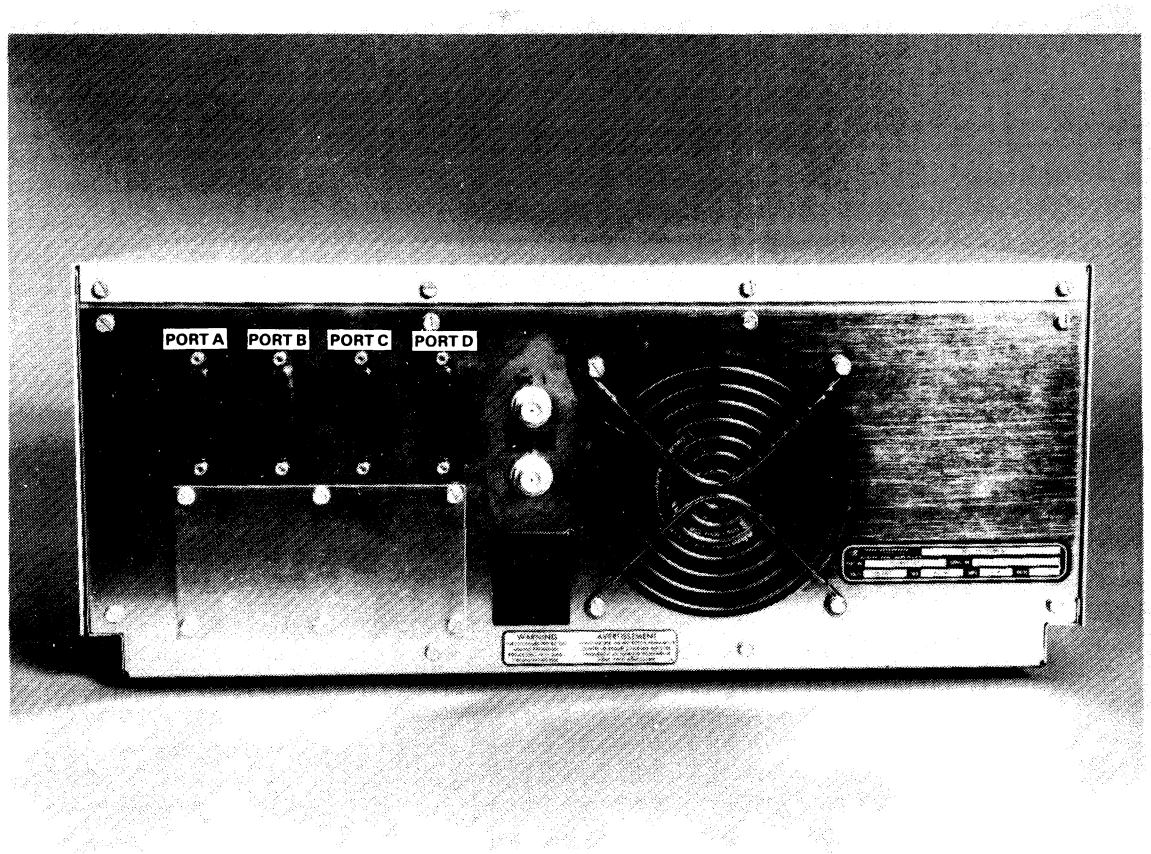

FIGURE 2-8. BACK PANEL LAYOUT

2.3.1 Stand Alone Mode Connections.

The stand alone mode requires the customer to supply an EIA Terminal and a cable that will interface the terminal to the XDS. The terminal is connected to EIA Port A. Figure 2-9 shows the cabling configuration for the stand alone mode. The terminal should be powered from the same circuit as the XDS.

CAUTION

DO NOT CONNECT OR DISCONNECT THE TERMINAL TO THE XDS WITH POWER APPLIED TO EITHER DEVICE.

The XDS Port A is set for auto baud and will automatically set to the baud rate of the terminal. The terminal must be set up per Table 2-6.

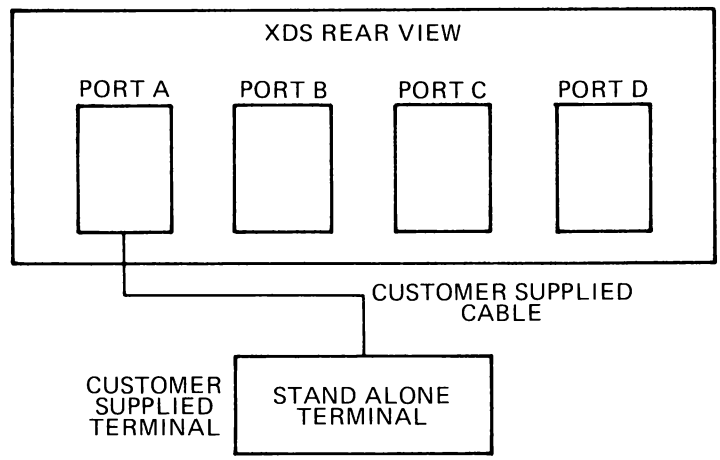

FIGURE 2-9. STAND ALONE MODE XDS CONNECTIONS

TABLE 2-6. TERMINAL CHARACTERISTIC REQUIREMENTS

Parameter	Terminal Requirements
Baud Rate	19.2K, 9.6K, 4.8K, 2.4K, 1.2K, 600, 300, or 110
Parity	Even
Stop Bits	2
Character Length	7 Bits
Transmission Mode	Full Duplex

The cable required depends on the terminal selected. Pin 25 of Port A is used for multi-processor operation and should not be used in the terminal cable. Refer to Table 2-7 for example cable.

TABLE 2-7. CRT CABLE

CRT		XDS	
PIN	SIGNATURE	PIN	SIGNATURE
2	RX	2	TX
3	TX	3	RX
1	PE	1	PE
7	SG	7	SG

2.3.2 Connection to a Host Computer.

The XDS will interface with a host computer system via an EIA interface. This feature allows the XDS to be downloaded from the host computer and allows the user to become a remote terminal on the host computer. The customer needs to supply the XDS to host computer interface cable, the EIA terminal and the terminal interface cable. Refer to Table 2-8 for example XDS-Host cable.

TABLE 2-8. XDS-HOST CABLE

XDS		HOST*	
PIN	SIGNATURE	PIN	SIGNATURE
2	RX	2	TX
3	TX	3	RX
1	PE	1	PE
7	SG	7	SG
		5	JUMPER
		8	
		6	JUMPER
		18	
		20	

*EIA Interface Module, Texas Instruments DS 990 Computer.

2.3.2.1 Host System Requirements. The communications link software is capable of communications with a wide variety of host computers, ranging from a small business system computer to a large time-share system. The computer must be able to support an EIA terminal with keyboard and cassettes such as the Texas Instruments 733 ASR. Reference the appropriate Emulator User's Guide for commands required to activate the interface to the host computer.

2.3.2.2 Hardware Requirements. The EIA communications link's interface signals and pin out is given in Table 2-2. The cabling requirements are shown in Figure 2-10.

The XDS has a software selectable baud rate for EIA Port D. These rates are 110, 300, 600, 1200, 2400, 4800, 9600, 19200. The baud rate of the host computer must be set to one of these rates in order to interface with the XDS.

CAUTION

DO NOT MAKE CABLE CONNECTIONS TO THE XDS OR THE HOST COMPUTER WITH POWER APPLIED TO EITHER UNIT.

2.3.3 Logging Device Connection.

A logging device such as a printer may be connected to the XDS. The logging device will record all transactions that take place on the terminal. The logging device is connected to Port C as shown in Figure 2-10.

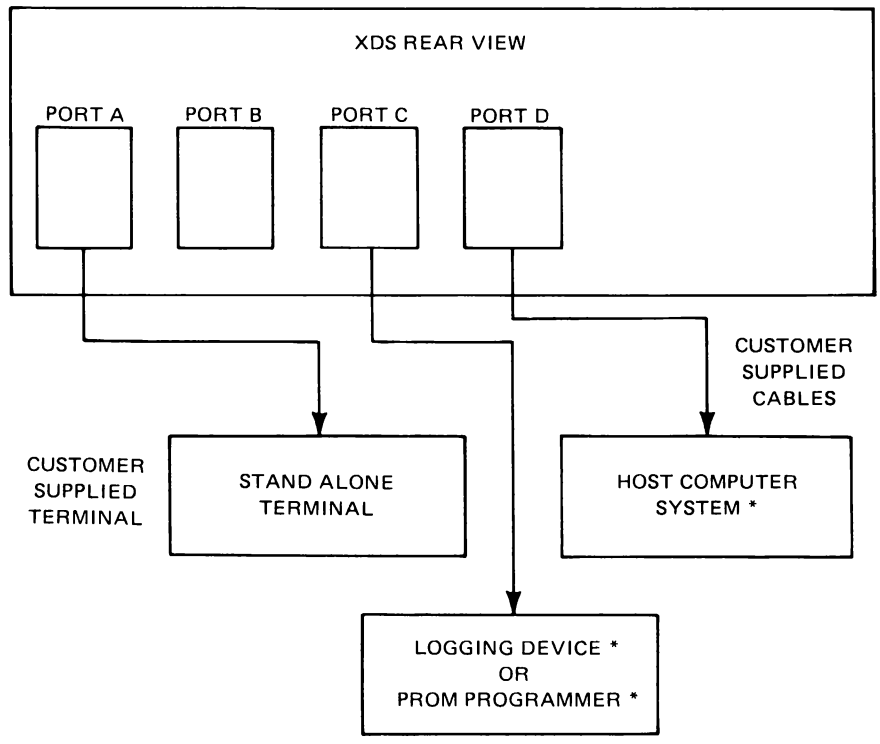

* Customer supplied options.

FIGURE 2-10. XDS CONNECTION TO A HOST COMPUTER

2.3.4 Multi-processor Connections.

Two or more XDS units may be connected in daisy chain for multi-processor emulation. The terminal connects to the first emulator in the chain in the same way as the stand alone mode. A host computer may be connected to the last emulator in the chain in the same manner as in the host computer connection for a single emulator. The computer is not required for multi-processor emulation. The emulators are connected to each other by connecting the port used for the host computer to the port on the next XDS that is used for the terminal. The method of synchronization is to use pin 17 in the daisy chain cable.

The daisy chain cables should be built in a pin to pin configuration, that is to say pin 1 connects to pin 1, pin 2 to pin 2 etc. Pin 25 is required for multiprocessor operation. Refer to Table 2-9 for daisy chain cable wire list.

TABLE 2-9. DAISY CHAIN CABLE WIRE LIST

PIN	SIGNATURE	PIN
1	PE	1
2	TX	2
3	RX	3
5	CTS	5
7	SIGNAL GND	7
8	RTS	8
17	RUN/HALT	17
25	AMPLRST –	25

2.3.5 Diagnostic Mode Connections.

The Diagnostic Mode of operation requires a customer supplied EIA terminal, customer supplied interface cable and a customer supplied MODEM that will interface with EIA Port D on the XDS. Figure 2-12 shows the connections required for the diagnostic mode. The pin list for the EIA interface is given in Table 2-2. This mode is used when the customer needs the assistance of a Texas Instruments Regional Technology Center to help with a problem or question on emulator performance.

CAUTION

DO NOT MAKE CONNECTIONS TO THE MODEM OR EMULATOR WITH POWER APPLIED TO EITHER UNIT.

Reference to appropriate Emulator User's Guide for information on the software commands in the diagnostic mode.

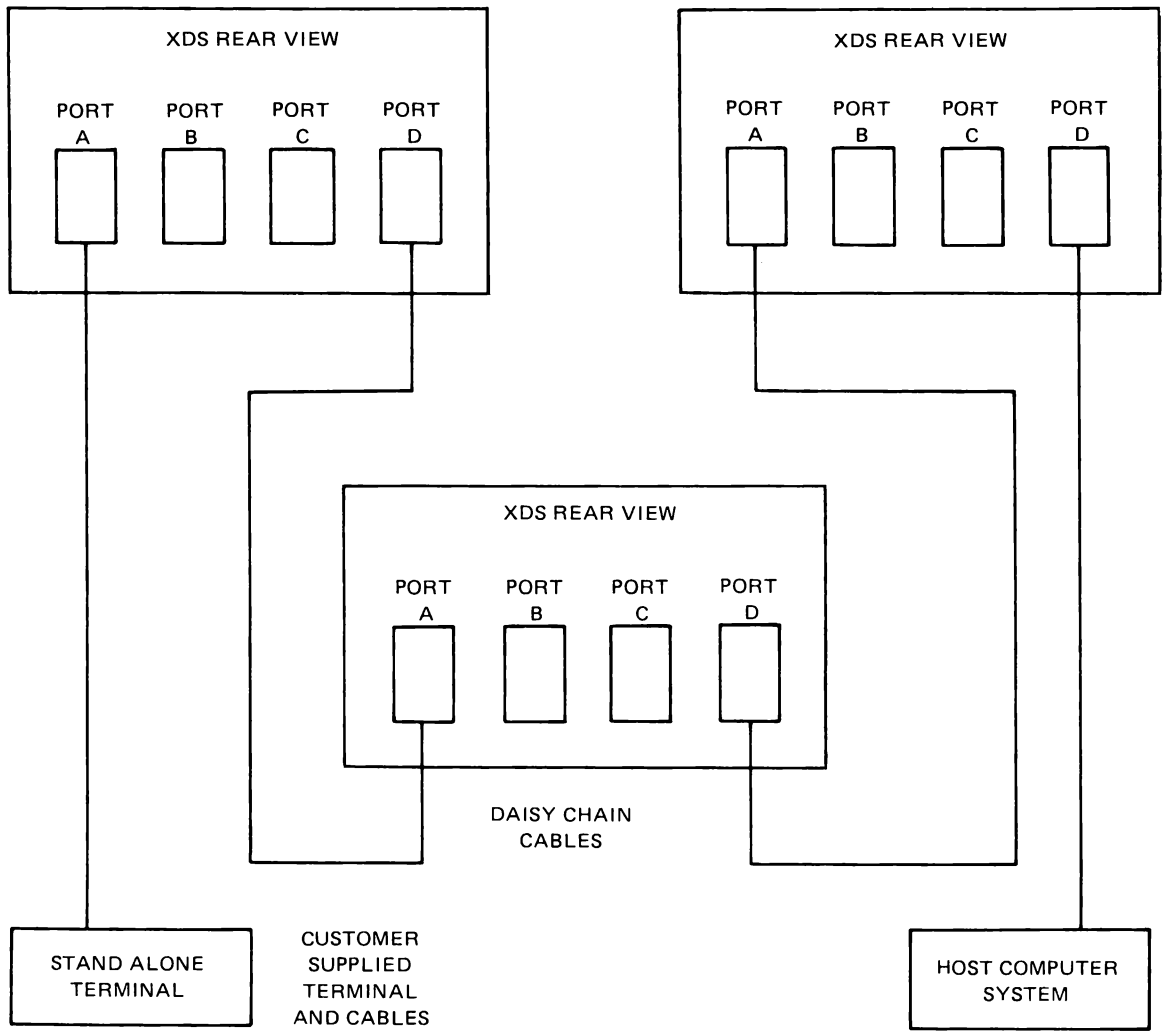

FIGURE 2-11. MULTI PROCESSOR CONNECTIONS

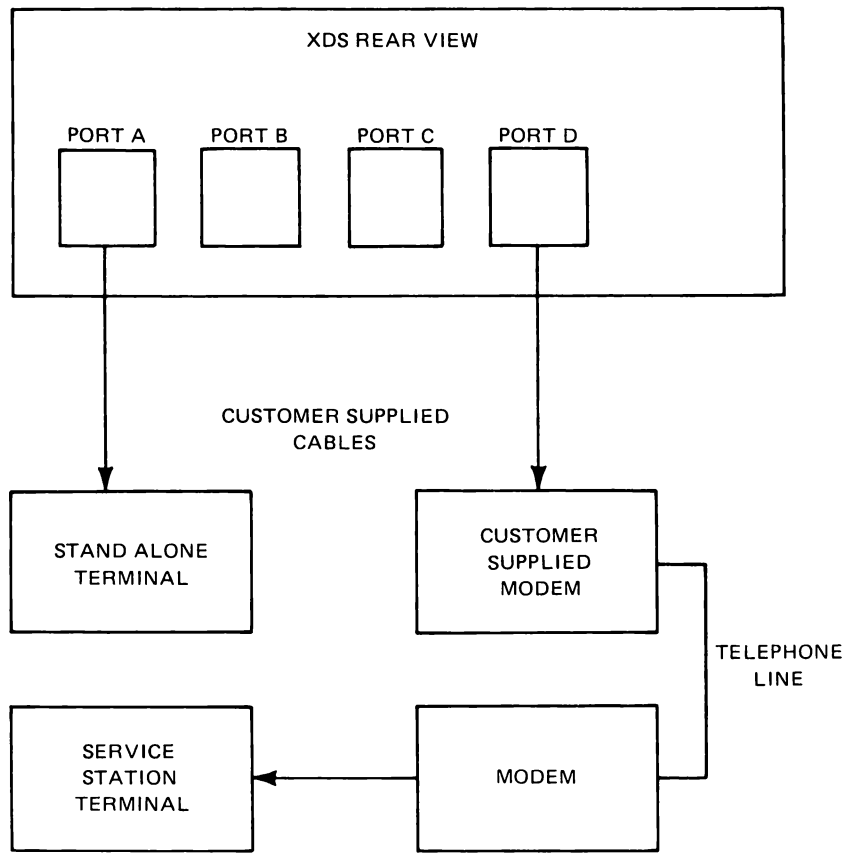

FIGURE 2-12. DIAGNOSTIC MODE CONNECTION

2.4 SYSTEM GROUNDING

The XDS is set so that earth ground is connected to logic ground. The system should be connected in this manner when used in the stand alone mode. If the unit is to be connected to a host computer, then the grounds may need to be separated. Consult the computer system manual for this grounding requirement.

2.5 POWER CONNECTION AND CONVERSION

WARNING

DO NOT CONNECT THE XDS TO A POWER SOURCE UNTIL THE INSTALLATION PROCEDURE IS COMPLETE.

Normally the XDS will accept available power; however, if the voltage identification plate does not agree with the local power then a power conversion will be required. Power conversion may be accomplished by installing the appropiate power conversion kit. Power conversion must be performed by qualified personnel only. Refer to Table 2-10 for conversion kit part numbers.

TABLE 2-10. POWER CONVERSION KITS

Convert From 115 Volts To	Kit PN
220 V	2232141-1
240 V	2232141-2

2.6 INSTALLATION COMPLETION

To complete the installation of the XDS, perform the following steps:

1. Check that all circuit boards are correctly installed in the card case and that their required cables are connected. Check that the target cable strain relief assembly and optional Breakpoint Trace Board extended address cable are properly secured.

2. Install the front panel by placing the top of the panel under the lip at the top of the XDS. Push the bottom of the front panel toward the instrument taking care that the two thumb screws are inserted into their screw holes. Tighten the two thumb screws to hold the front panel in place.

3. Check that all cables and the power cord are connected to the AMPL Instrument.

4. Verify that power source is compatible with the XDS input power requirements. Check that the power switch is in the OFF position. Plug the XDS power cord into the correct power source wall outlet. Set the power switch to ON.

5. Check to see that the power light is on and fan is running. If light is not on, turn power off immediately and check that power is available at wall outlet. If power is present, disconnect power cord. Check the fuses, located in the power bulkhead of the back panel of the instrument and in the power supply. If the fuses are bad, replace them with ones of the same rating. Reconnect the instrument and try to power it up again. If the instrument still will not power up, refer to troubleshooting Table 2-11.

6. Check that the stand alone terminal and other associated equipment are connected to the correct power source and powered up.

The XDS is now ready for use.

TABLE 2-11. POWER-UP TROUBLESHOOTING

SYMPTOM	POSSIBLE TROUBLE
1. Unit does not power-up. Fan does not operate.	a. Line cord is not properly connected to unit and AC outlet. b. AC outlet providing incorrect power. c. Chassis fuse blown.
2. Power light does not illuminate. Fan operates.	a. Power light burned out. b. Power supply fuse blown. c. Power supply overload protect enabled.
3. Terminal does not come on line.	a. Baud rates incompatible. b. Terminal not powered on. c. Switch settings for Port incorrect. d. Terminal interface cable malfunction.
4. Program does not communicate with target system.	a. Target connector not secured or broken pin. b. Target system power off.
5. Sync Halt/Run trouble.	Ensure Run/Halt line is connected in daisy chain cable.
6. All units in multi-processor configuration fail to have ID's assigned.	a. One or more units powered off. b. Daisy chain cable malfunction.

3. OPERATION

3.1 CONTROLS AND INDICATORS

The controls and indicators for the XDS are located on the front panel of the unit. Figure 3-1 shows the controls and indicators.

3.1.1 Power Switch.

The power switch applies line voltage to the unit. When the power is on, the fan in the unit should be running and the power light should be on. Reference the appropriate Emulator User's Guide for start up procedures for the emulator software after power up.

3.1.2 Power Indicator Light.

When the indicator light is on power is applied to the unit.

3.1.3 Reset Switch.

The reset switch when pressed clears the emulator hardware. Note, there may be a one or two second delay after pressing reset as voltage is sampled to ensure it is acceptable. When a hardware reset is performed, the system software must be restarted. The emulator memory will not be cleared with the reset switch. Reference the appropriate Emulator User's Guide start up procedure after reset. The system should always be reset, by pressing the reset switch, after power is applied to the unit.

3.1.4 Status Indicator Lights.

There are four status indicator lights on the front panel of the XDS. These lights are controlled by the emulator board set installed in the XDS. The function of these lights may vary depending on the emulator board set installed. Reference the appropriate Emulator User's Guide for further information on the status indicator lights.

3.2 STAND ALONE MODE

When operating the XDS in the stand alone mode all commands are performed at the terminal. The command set is unique for each emulator and the appropriate emulator software manual should be referenced.

3.3 MULTIPROCESSOR MODE

The multiprocessor mode allows up to eight XDS's to be connected in a daisy chain. One terminal is required for entering commands and a host computer may be connected if desired. All commands for all the XDS units are entered through the one terminal. The XDS units are assigned addresses by the software and only one unit may be addressed at one time. When one unit is being addressed the other units are in background mode. When a unit is in the background mode it will not accept commands but will pass commands on to the next emulator in the chain. An emulator may be executing a program while it is in the background mode. When another emulator is addressed, the former emulator is put in background then the currently addressed emulator is taken out of the background mode. All the emulators may be put in the background mode to allow the terminal to talk directly to the host computer.

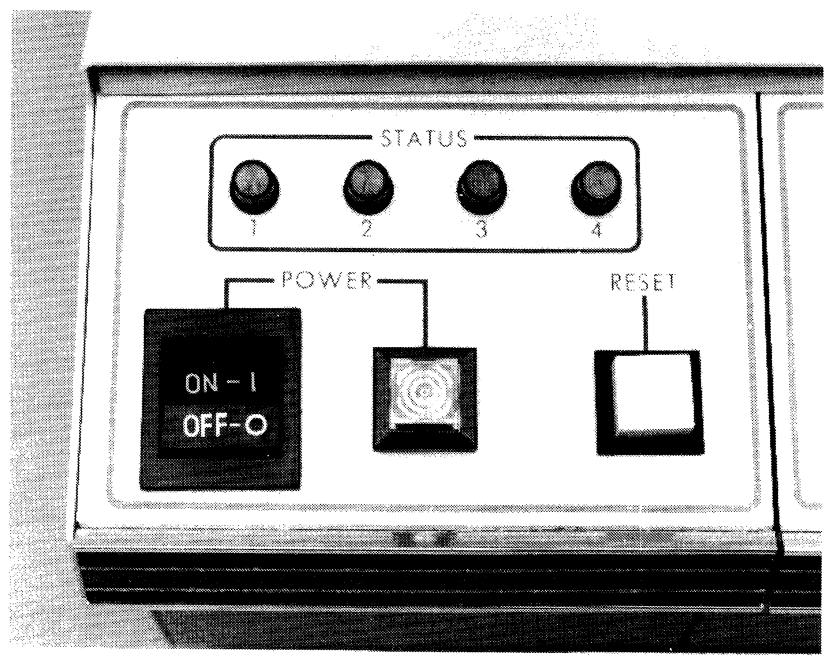

FIGURE 3-1. XDS INSTRUMENT CONTROLS AND INDICATORS

3.4 DIAGNOSTIC MODE

The diagnostic mode is used when the unit needs to be connected to a Texas Instrument Regional Technology Center. The connection may be made over a 300 baud to 19.k baud line. The equipment required is an EIA MODEM and the terminal used in the stand alone mode. The system may be set up so that either the operator or the service station technician observes while the other executes commands. Reference the appropriate Emulator Stand Alone Software Manual for information regarding the command set for entering and exiting the diagnostic mode and for use when operating in the diagnostic mode.

3.5 HOST COMPUTER MODE

The XDS may be tied to a host computer via the EIA interface. This mode is used to download programs from the host computer to the XDS. The host computer mode must be used in combination with the stand alone mode or the multi-processor mode.

3.6 TARGET CONNECTOR

The target connector is unique for each emulator. For information on the target connector reference the appropriate emulator installation and reference manual.

CAUTION

WHEN THE TARGET CONNECTOR IS NOT IN USE, IT MUST BE PROTECTED TO PREVENT CONTACT WITH METAL OBJECTS. CONTACT CAUSES SHORT CIRCUITS AND POSSIBLE DAMAGE TO THE UNIT. ENSURE THAT POWER IS OFF WHEN MAKING CONNECTION WITH TARGET SYSTEM.

3.7 POWER-UP SEQUENCE

Although the sequence of steps necessary to power-up the XDS need not be performed in any particular order, it is recommended that the following be used to avoid problems:

1. Emulator power – ON

2. Target system power – ON

3.8 ADDITIONAL READING

Refer to the XDS Emulator User's Guide packaged with the system for a "walk through" demonstration of program and software information.

4. PREVENTIVE MAINTENANCE

4.1 PREVENTIVE MAINTENANCE

NOTE

By publication of the preventive maintenance schedules, procedures and time intervals in this section, Texas Instruments assumes no liability on contractual requirement. The procedures are intended as a guide for use by the operator or other qualified service personnel and may be performed during routine service calls. They are for reference only and subject to change without notice.

Table 4-1 gives the preventive maintenance schedule for the XDS.

TABLE 4-1. XDS OPERATOR MAINTENANCE SCHEDULE

PERIOD	FUNCTION
As Required	Clean Cabinet
Monthly	*Clean Air Filter
Tri-monthly	*Wash Air Filter – replace if required
Semi-annually	*Check power supply outputs

***To be preformed by qualified service personnel only.**

4.2 CLEANING THE CABINET.

To clean the cabinet of the XDS the following steps are required.

1. Turn off power to the unit.

2. Using a damp lint free cloth wipe all surfaces of the unit. For heavy dirt build up use a mild soap solution on the cloth, do not spray soap solution on the unit. Clean air intake and exhaust area.

3. Restore power to unit.

4.3 CLEANING THE AIR FILTER.

To clean the air filter of the XDS the following steps are required.

1. Turn off power and unplug unit from its power source.

2. Turn the instrument so that the back panel may be accessed and remove the top row of four screws. Refer to Figure 4-2 for the location of the top cover screws.

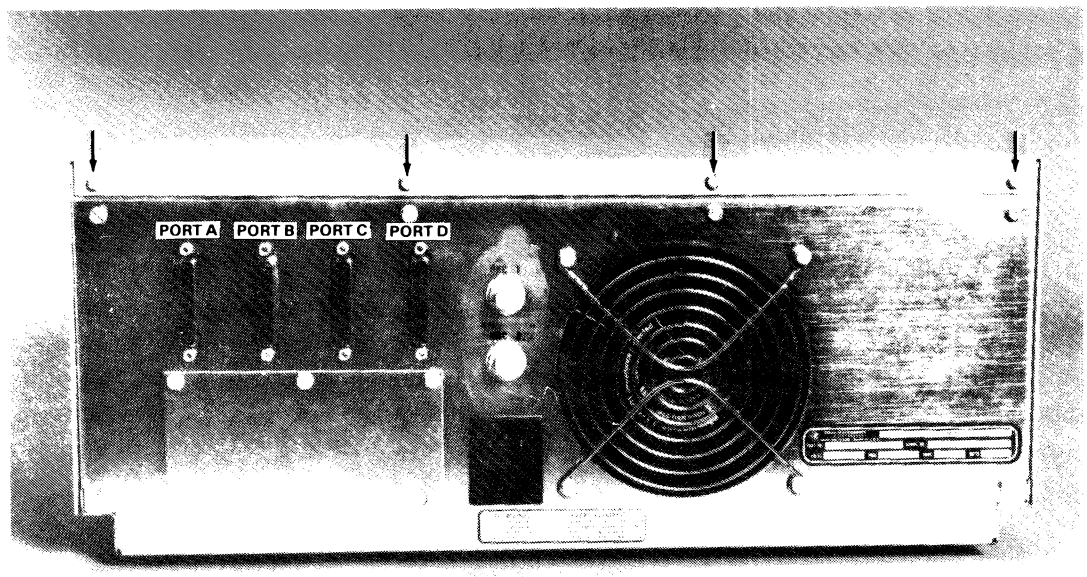

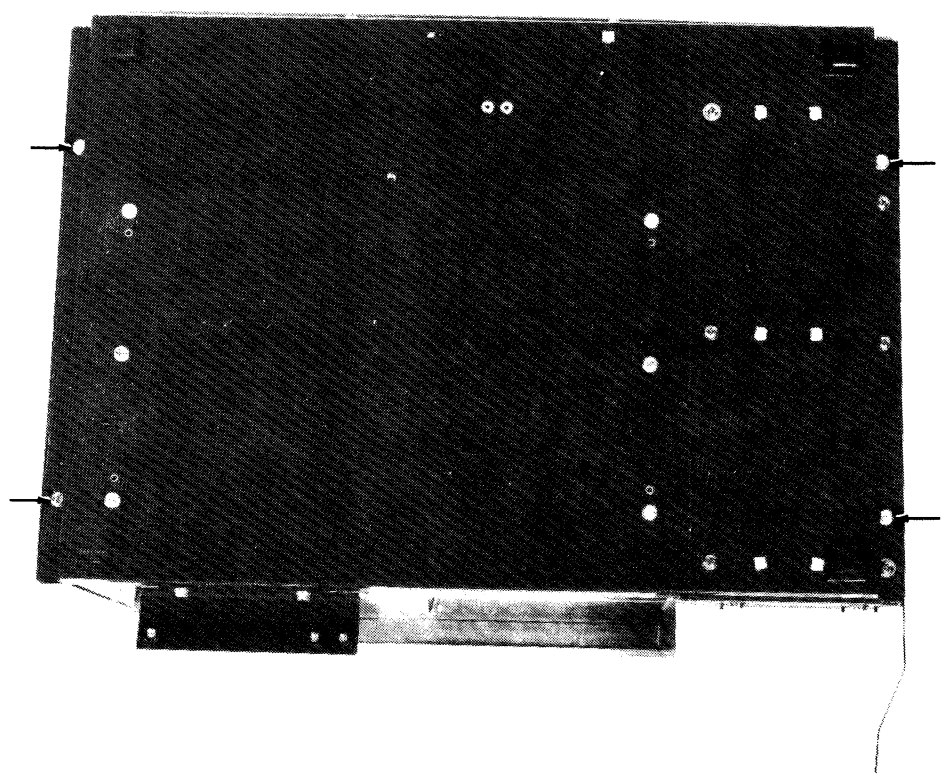

FIGURE 4-2. TOP COVER SCREW LOCATIONS
REAR VIEW & BOTTOM VIEW

3. Turn the instrument on its side and remove the four screws, two on each side of the instrument, that hold the top cover to the base of the instrument. Carefully set the instrument on its feet and lift the top cover from the instrument. Refer to Figure 4-2 for the location of the top cover screws.

4. Remove air filter from top cover by removing the four retaining nuts and lifting the filter from the four mounting screws. It may be necessary to insert a screw driver between the filter and the chassis to lift the filter from the mounting screws. Refer to Figure 4-3 for the air filter mounting arrangement.

5. Clean the air filter by blowing compressed air through the filter in the opposite direction of the normal airflow.

6. Wash the air filter using a mild soap and water solution. Replace the filter if it shows any signs of deterioration. Dry the filter by pressing it between paper towels and blowing compressed air through it. The filter must be completely dry before it is reinstalled.

7. Install air filter and tighten the four nuts.

8. Place the top cover on the instrument, then turn the instrument on its side. Replace the four screws and carefully place the instrument on its feet. Replace the four screws on the back panel of the instrument.

9. Restore power to the unit.

4.4 POWER SUPPLY VOLTAGE CHECK.

To check the voltage of the power supply the following steps are required.

1. Turn off power to the unit.

2. Replace comm or comm/memory card in slot 4 with an extender card, PN2311130-0001.

3. Restore power to the unit.

4. Make the following measurements:
   a. 5 volts P1 .... pin 82 ± 2 %
   b. + 12 volts P1 .... pin 22 ± 6 %
   c. − 12 volts P1 .... pin 21 ± 6 %

5. Turn off power to the unit.

6. Remove extender card, and replace comm or comm/memory card.

7. Restore power to the unit.

4.5 REPLACING THE SYSTEM FUSE

The fuse is located in the power cord bulkhead below the power cord. If the fuse needs to be replaced the following steps are required to change the fuse.

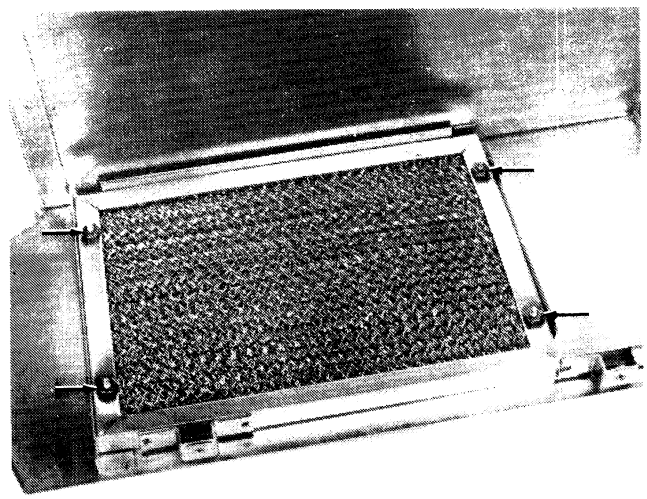

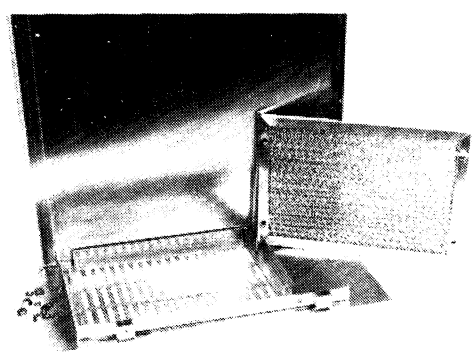

FIGURE 4-3. AIR FILTER MOUNTING

1. Turn power off and unplug the unit from the power source.

2. Remove the power cord from the instrument.

3. Using a small sharp instrument such as screw driver, pry the tab outward. Refer to Figure 4-4 for the tab location.

4. Pull the drawer unit from the power bulkhead.

WARNING

DO NOT CONNECT THE XDS TO A POWER SOURCE WHEN THE FUSE DRAWER IS REMOVED.

5. Lift the tab and pull the fuse platform from the drawer unit. Refer to Figure 4-5 for the location of the tab and fuse platform removal.

6. Locate the fuse on the platform Figure 4-6 and replace if required. Refer to Table 4-2.

WARNING

FOR CONTINUED PROTECTION AGAINST FIRE HAZARD, REPLACE FUSE WITH SAME TYPE AND RATING.

7. Insert the fuse platform into the drawer and push until it is locked into place.

8. Insert the fuse drawer into the bulkhead until it is flush with the bulkhead.

4.6 REPLACING POWER SUPPLY FUSE

The power supply contains a fuse which normally should not need replacing unless the power supply fails. The power supply fuse is located on the circuit board of the power supply. See Figure 4-7 for fuse location. The location of the power supply fuse may differ depending upon the model used. Figure 4-7 shows the models currently being utilized. Replace the fuse as follows:

1. Turn off power to the instrument and disconnect it from the power source.

2. Remove the top cover from the instrument using the procedure in paragraph 4.3 steps 2 and 3.

3. Locate the fuse on the power supply and replace it with one of the same type and rating. Refer to Table 4-2.

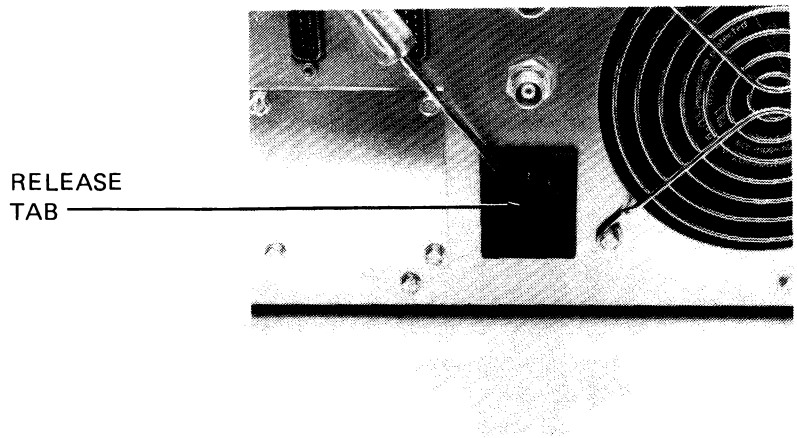

FIGURE 4-4. LOCATION OF FUSE DRAWER TAB

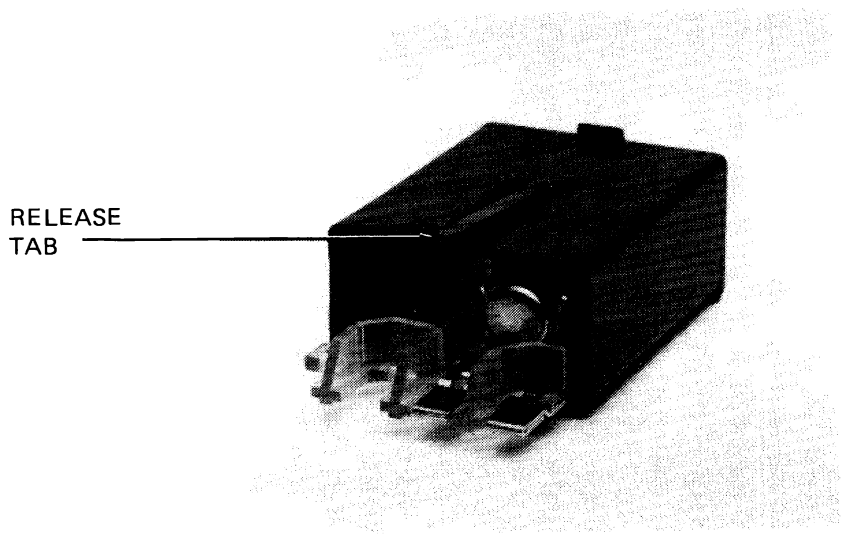

FIGURE 4-5. LOCATION OF FUSE PLATFORM RELEASE TAB

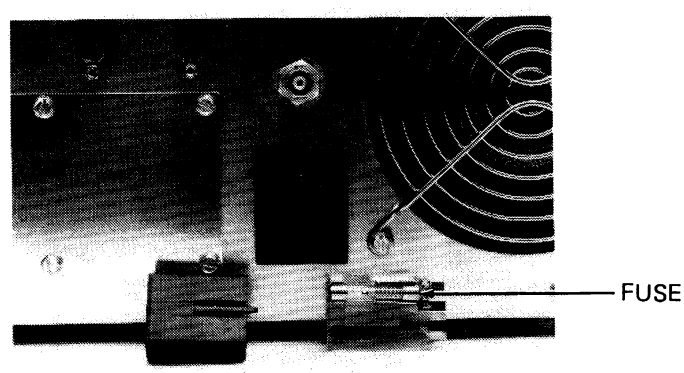

FIGURE 4-6. FUSE LOCATION

WARNING

FOR CONTINUED PROTECTION AGAINST FIRE HAZARD ALWAYS REPLACE THE FUSE WITH THE SAME TYPE AND RATING.

4. Replace the top cover on the unit using the procedure in paragraph 4.3 step 8.

5. Connect the instrument to the appropriate power source and restore power to the unit.

TABLE 4-2. FUSE REPLACEMENT CHART

XDS MODEL	FUSE RATING AMPS	FUSE RATING VOLTS	TYPE	TI PN	EQUIVALENT
2310990-1	3	125	SB	410822-60	Buss MDX-3
2310990-2	2	250	SB	2220531-4	Schurter 034.3120
2310990-3	2	250	SB	2220531-4	Schurter 034.3120

4.7 REPLACING FRONT PANEL LAMPS

If the front panel lamps need to be replaced the following procedure should be followed.

1. Turn off power to the instrument and disconnect it from the power source.

2. Remove the top cover from the instrument using the procedure in paragraph 4.3 steps 2 and 3.

3. Remove the screw holding the power panel to the card cage flange. This screw is located on the power supply side of the card cage and is accessed from the rear of the card cage flange.

4. Remove the two screws located on the bottom of the power panel. The panel will then be free from the instrument. Care should be taken so that the wires are not pulled, pinched or broken when working with the power panel.

5. The power light lamp is installed in a press fit fixture and may be removed by pulling the fixture from the rear of the power light assembly. The lamp is then removed from this fixture and should be replaced with the same type.

6. The status lights are sealed units and the whole unit must be replaced. The lamp assembly may be removed by unpluging the socket from the lamp and removing the spring clip. When ordering new lamps it is advised that new spring clips also be purchased. Insert the new lamp in the panel and secure with the spring clamp. Connect the socket to the lamp taking care to line up the "B" on the socket with the " + " on the lamp.

7. Install the power panel by loosely installing the screws in the bottom of the panel then place the screw through the card cage flange to the top of the power panel. Tighten all the screws.

8. Replace the top cover on the unit using the procedure in paragraph 4.3 step 8.

9. Connect the unit to an appropriate power source and restore power to the unit.

XDS INSTALLATION AND OPERATION

APPENDIX A SCHEMATICS

XDS MOTHERBOARD SCHEMATIC

XDS CHASSIS INTERCONNECT DIAGRAM

COMMUNICATION/MEMORY EXPANSION SCHEMATIC

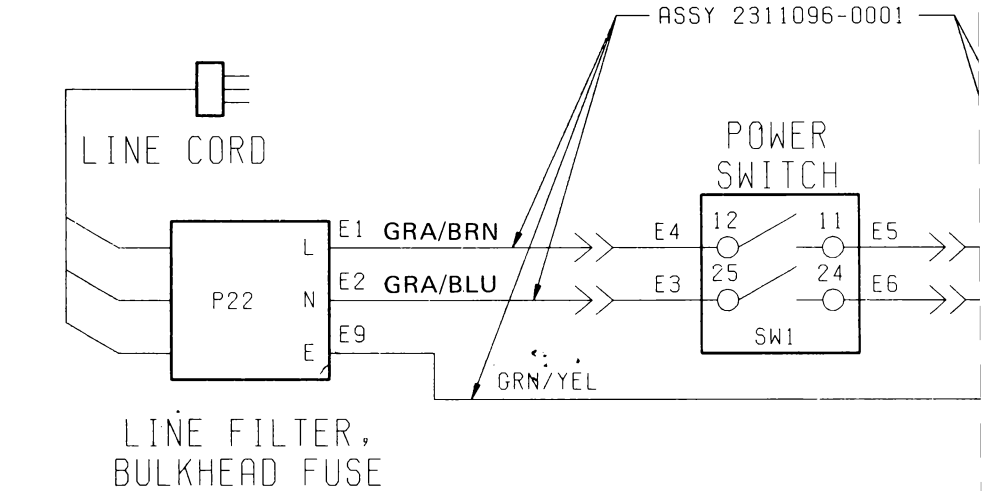
ASSY 2311096-0001
LINE CORD
POWER SWITCH
P22
L
N
E
E1 GRA/BRN
E2 GRA/BLU
E9
E4
E3
12
11
25
24
E5
E6
SW1
GRN/YEL
LINE FILTER, BULKHEAD FUSE

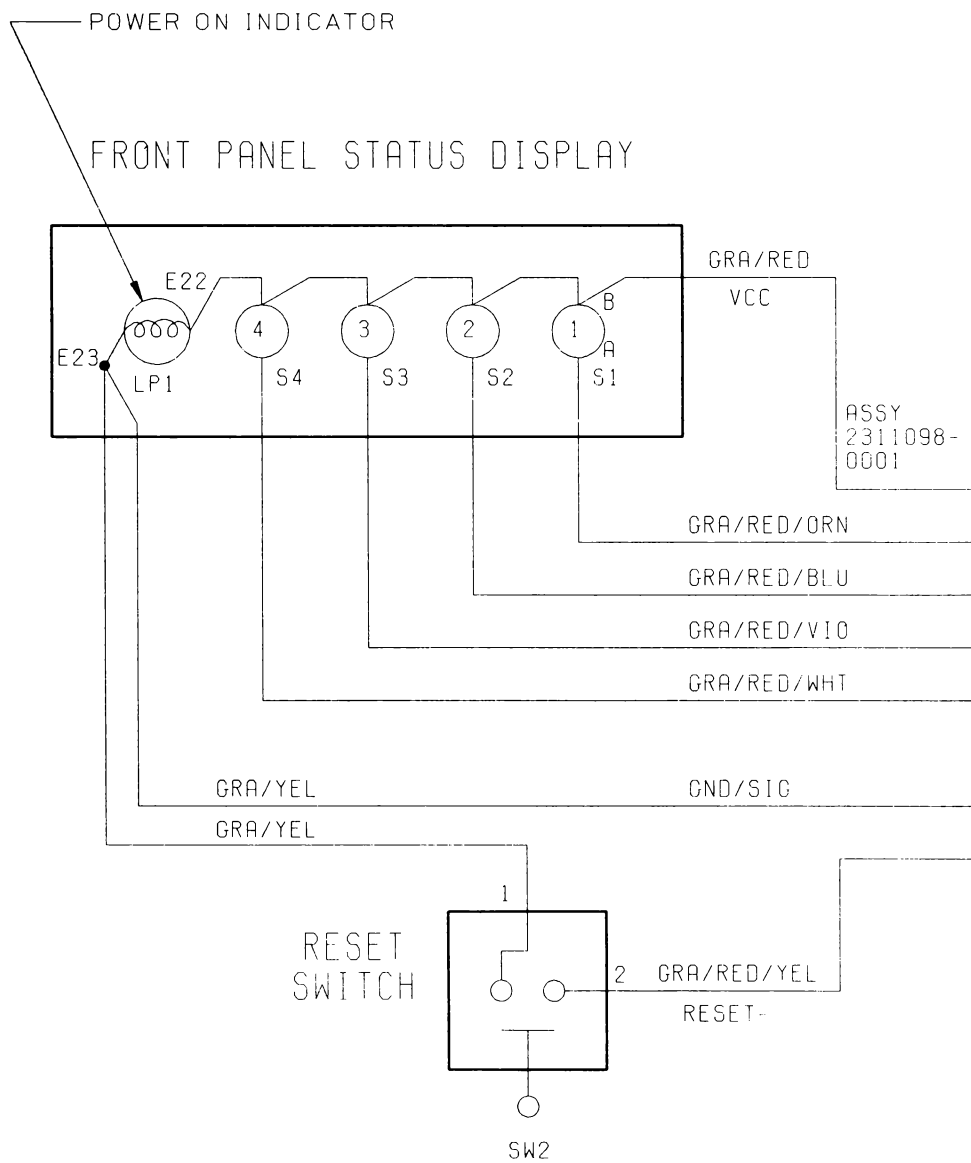
POWER ON INDICATOR
FRONT PANEL STATUS DISPLAY
E22
E23
LP1
4
3
2
1
B
A
S4
S3
S2
S1
GRA/RED
VCC
ASSY 2311098-0001
GRA/RED/ORN
GRA/RED/BLU
GRA/RED/VIO
GRA/RED/WHT
GRA/YEL
GND/SIG
GRA/YEL
1
RESET SWITCH
2
GRA/RED/YEL
RESET-
SW2

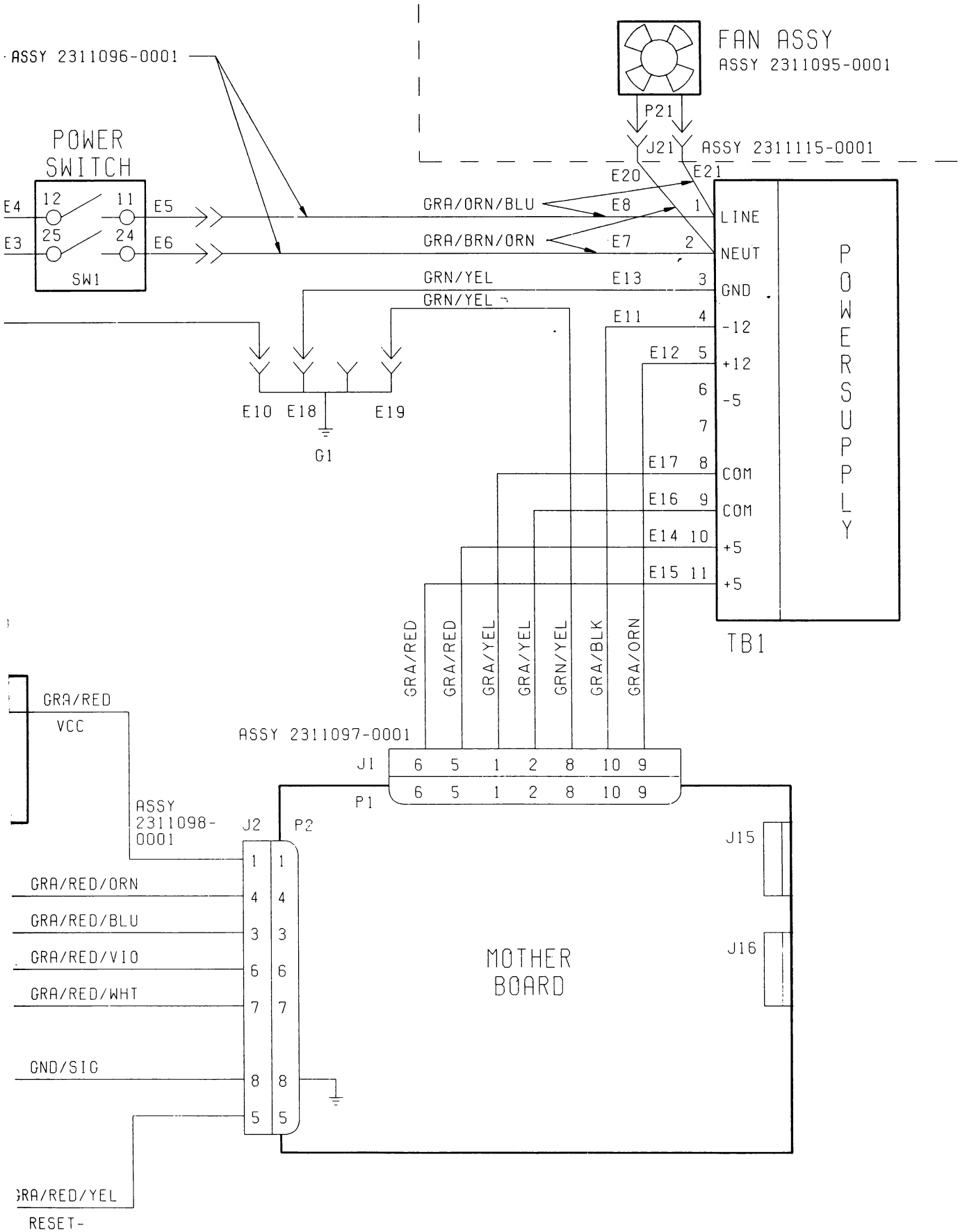

XDS CHASSIS INTERCONNECT DIAGRAM

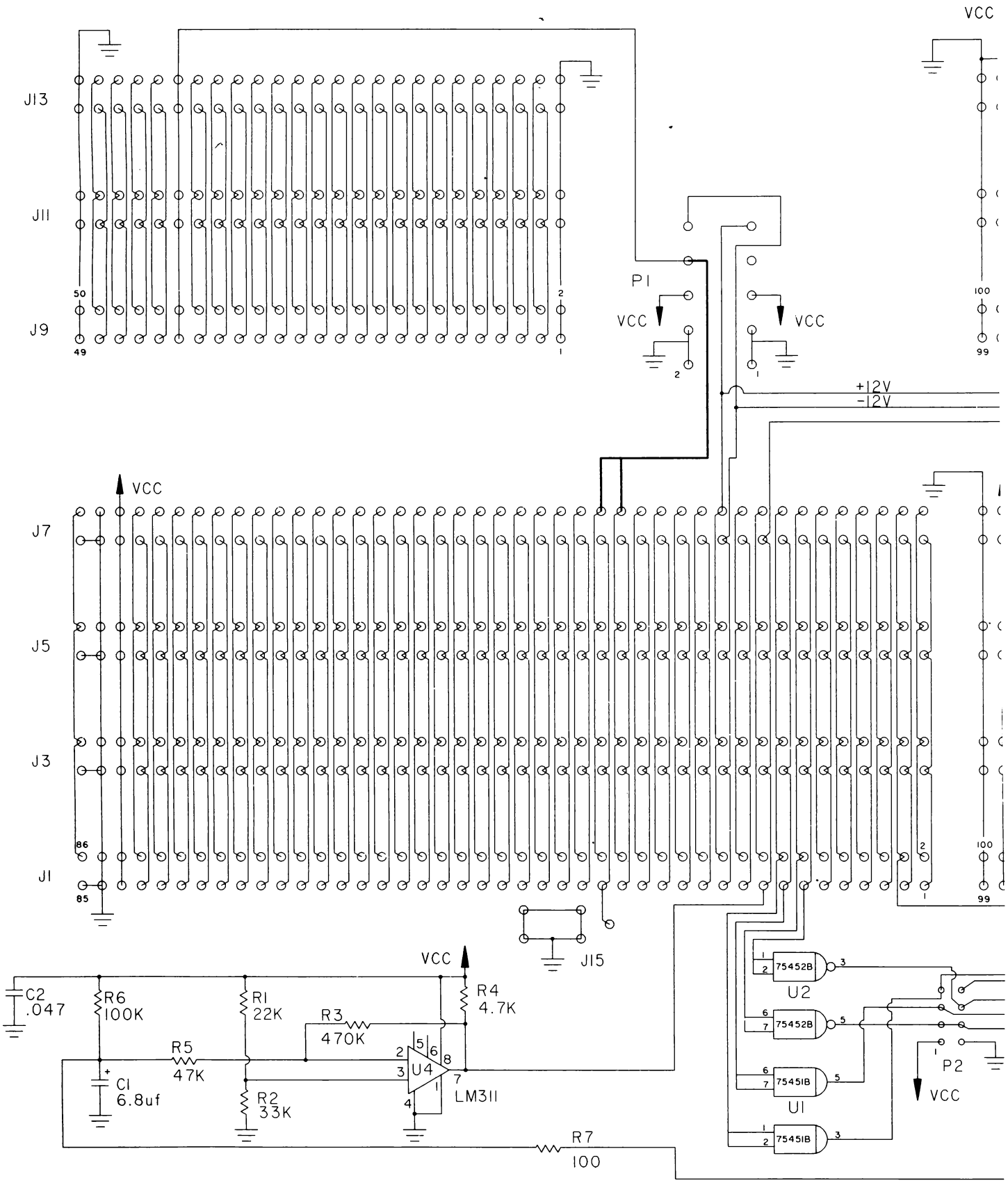
VCC
J13
J11
J9
50
49
2
1
P1
VCC
VCC
2
1
100
99
+12V
-12V
VCC
J7
J5
J3
J1
86
85
2
1
100
99
J15
VCC
C2
.047
R6
100K
R1
22K
R3
470K
R4
4.7K
R5
47K
C1
6.8uf
R2
33K
U4
LM311
R7
100
75452B
U2
75452B
75451B
U1
75451B
P2
VCC

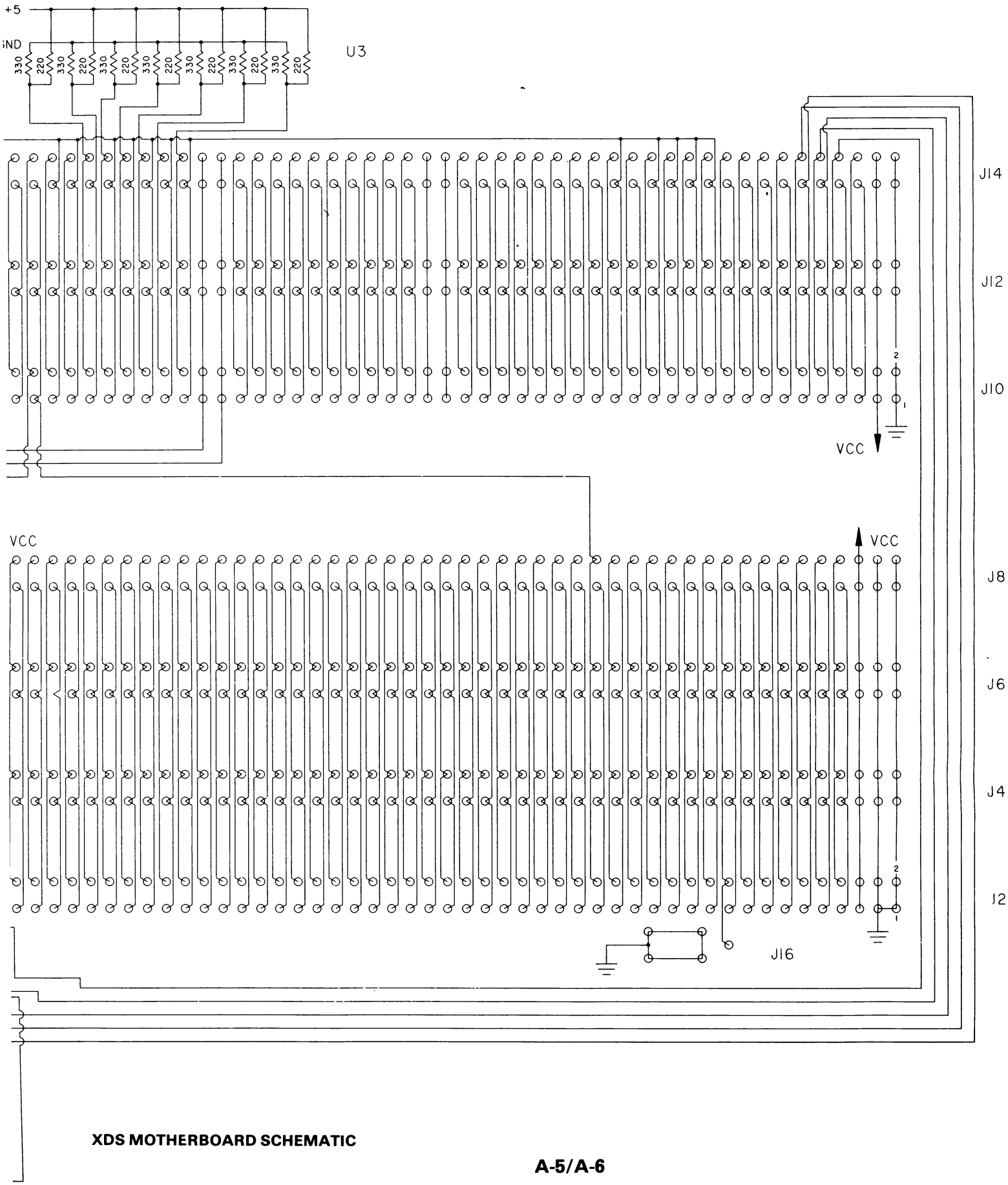

XDS MOTHERBOARD SCHEMATIC

2311052 1

REVISIONS

REV	DESCRIPTION	DATE	APPROVED

NOTES: UNLESS OTHERWISE SPECIFIED

1. ALL DEVICE TYPES ARE PREFIXED WITH SN74.
2. VCC IS APPLIED TO PIN 8 OF ALL 8-PIN IC'S, PIN 14 OF ALL 14-PIN IC'S, PIN 16 OF ALL 16-PIN IC'S, PIN 20 OF ALL 20-PIN IC'S, ETC.
3. GROUND IS APPLIED TO PIN 4 OF ALL 8-PIN IC'S, PIN 7 OF ALL 14-PIN IC'S, PIN 8 OF ALL 16-PIN IC'S, PIN 10 OF ALL 20-PIN IC'S, ETC.
4. DEVICE TYPE, PIN NUMBERS, AND REFERENCE DESIGNATOR OF IC IS SHOWN AS FOLLOWS:

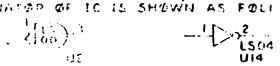

LS00 AND LS04 = DEVICE TYPE
1, 2, AND 3 = PIN NUMBERS
U8 AND U14 = REFERENCE DESIGNATOR

5. RESISTANCE VALUES ARE IN OHMS.
6. RESISTORS ARE ¼ WATT, 5%.
7. CAPACITANCE VALUES ARE IN MICROFARADS.
8. MSB/LSB DESIGNATIONS:
   A00 = MSB D00 = MSB
   A15 = LSB D15 = LSB

SPARES

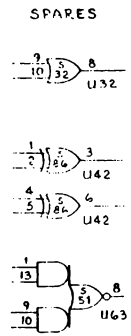

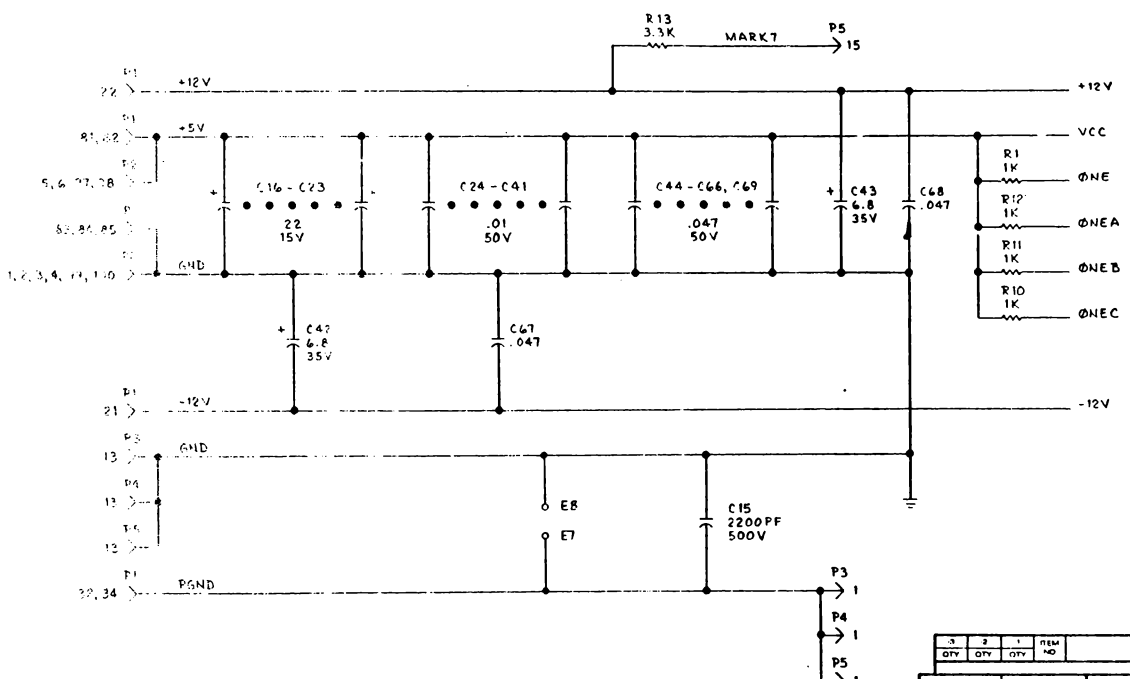

PARTS LIST

3 QTY	2 QTY	1 QTY	ITEM NO	PART OR IDENTIFYING NUMBER	NOMENCLATURE OR DESCRIPTION	NOTES

UNLESS OTHERWISE SPECIFIED
- DIMENSIONS ARE IN MILLIMETERS
- TOLERANCES: 2 PLACE DECIMALS ±0.25
  1 PLACE DECIMALS ±0.5 ANGLES ±1°
- INTERPRET UNNAMED PER DOD-D-1000
- REMOVE ALL BURRS AND SHARP EDGES
- CONCENTRICITY MACHINED DIAMETERS 0.25/1.04
- DIMENSIONAL LIMITS APPLY BEFORE PROCESSES
- PARENTHETICAL INFO FOR REF ONLY

HOLE TOLERANCE	THIRD ANGLE PROJECTION
0.33 THRU 3.18 +0.10 0.03	
3.20 THRU 8.35 +0.13 0.03	
8.38 THRU 12.70 +0.15 0.03	
12.73 THRU 19.05 +0.20 0.03	
19.08 THRU 25.40 +0.25 0.03	
25.43 THRU 101.60 +0.30 0.03	

2311050 | 7119
NEXT ASSY | USED ON
APPLICATION

C. KEELER 1-27-83

TEXAS INSTRUMENTS — SI-METRIC

LOGIC DIAGRAM, 95/99K MEMORY EXPANSION

SIZE D | CODE IDENT NO 06668 | 2311052

SCALE NONE | SHEET 1 OF 13

SEC NO | ZONE | NO | ADDITIONAL CLASSIFICATION | NOTES

REV STATUS OF SHEETS | REV | SH 1 2 3 4 5 6 7 8 9 10 11 12 13

8 7 6 5 4 3 2 1

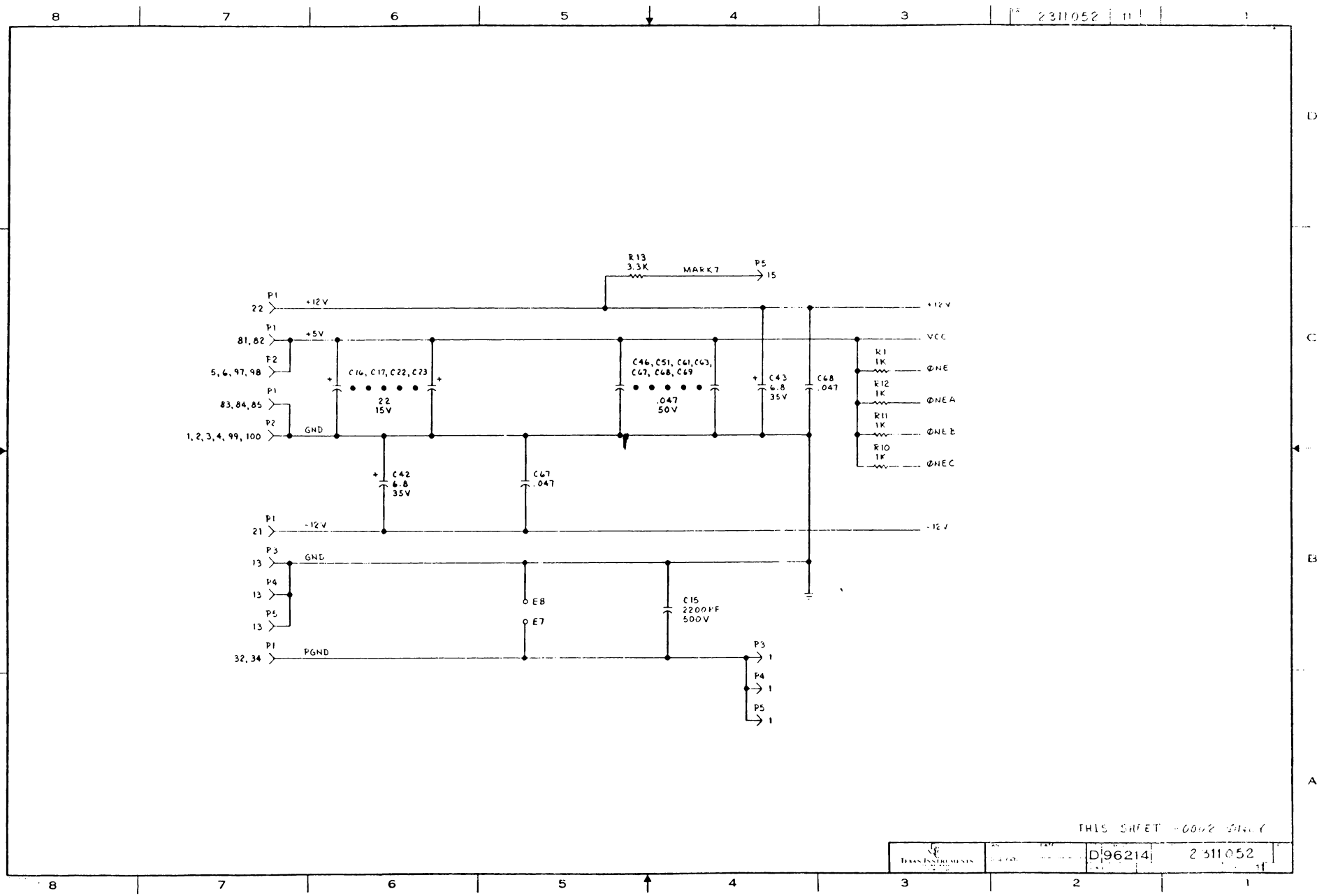

2311052
R13
3.3K
MARK7
P5
15
P1
22
+12V
+12V
P1
81, 82
+5V
VCC
P2
5, 6, 97, 98
C16, C17, C22, C23
22
15V
C46, C51, C61, C63,
C67, C68, C69
.047
50V
C43
6.8
35V
C68
.047
R1
1K
ØNE
R12
1K
ØNEA
R11
1K
ØNEB
R10
1K
ØNEC
P1
83, 84, 85
P2
1, 2, 3, 4, 99, 100
GND
C42
6.8
35V
C67
.047
P1
21
-12V
-12V
P3
13
GND
P4
13
P5
13
E8
E7
C15
2200PF
500V
P1
32, 34
PGND
P3
1
P4
1
P5
1
THIS SHEET
D 96214
2311052

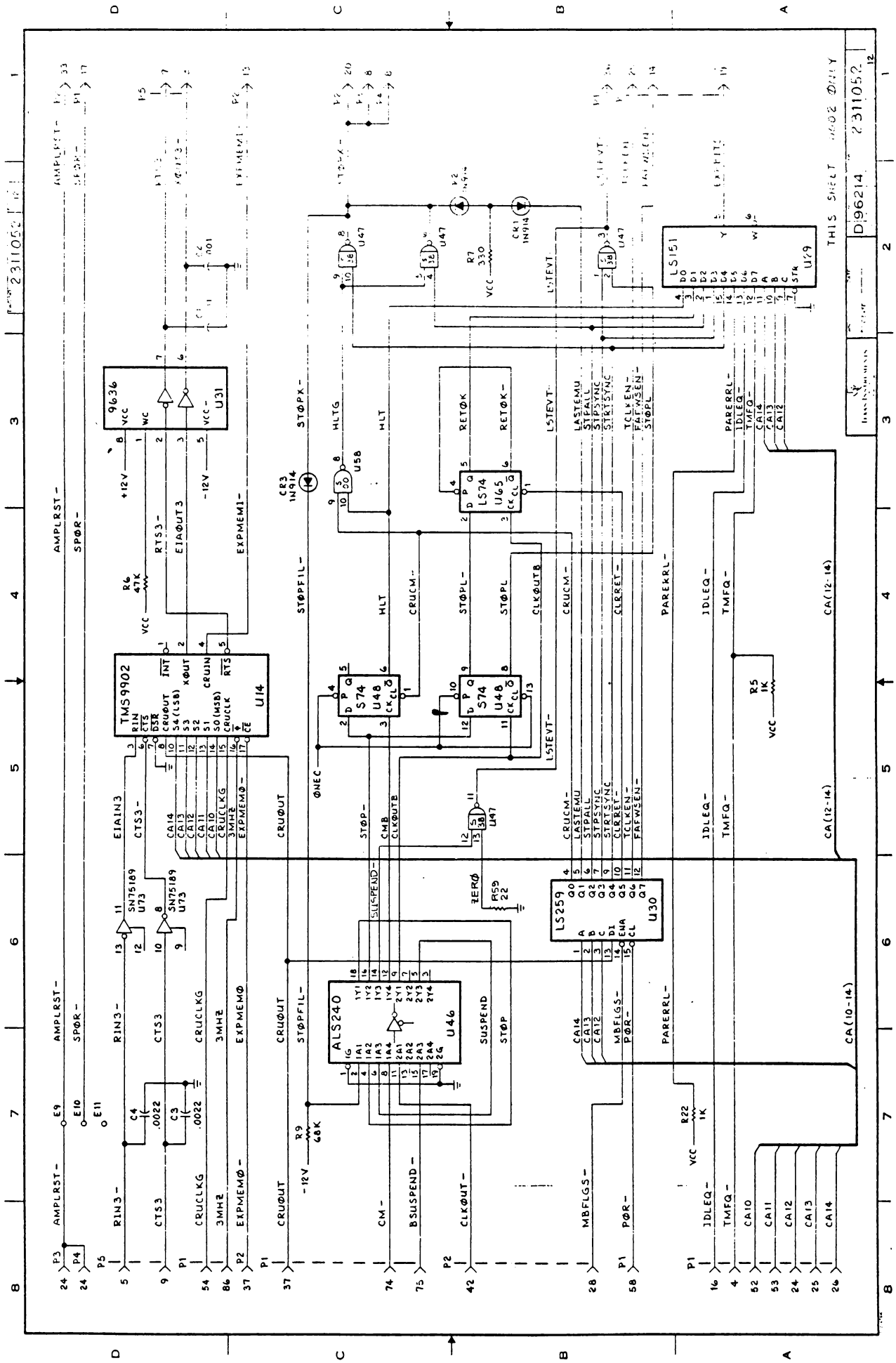

TMS9902
U14
9636
U31
S74
U48
LS74
U65
LS259
U30
ALS240
U46
LS151
U29
THIS SHEET 0002 ONLY
D96214
2311052

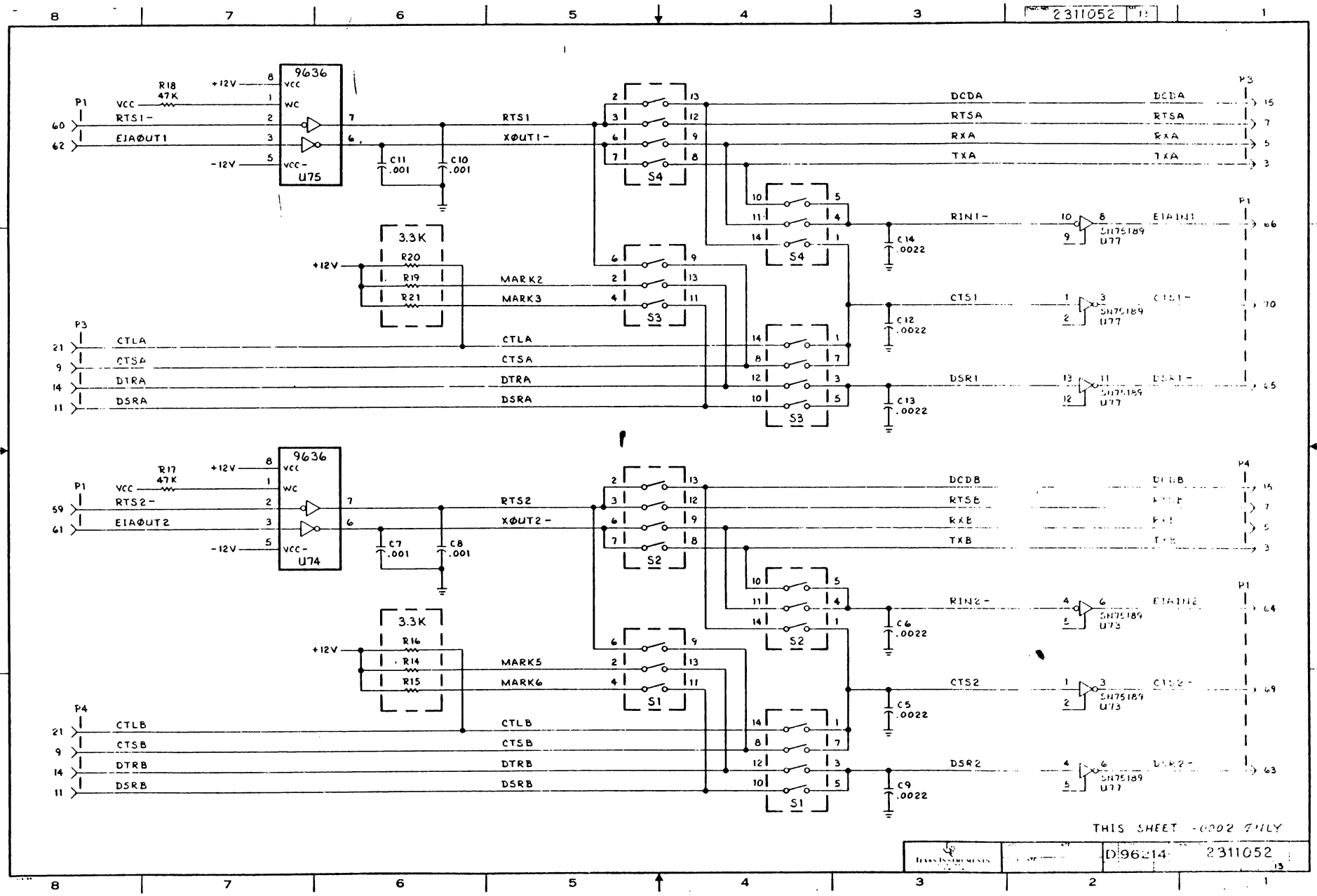
2311052
9636
U75
U74
R18 47K
R17 47K
+12V
-12V
VCC
RTS1-
EIAOUT1
RTS2-
EIAOUT2
C11 .001
C10 .001
C7 .001
C8 .001
3.3K
R20
R19
R21
R16
R14
R15
MARK2
MARK3
MARK5
MARK6
RTS1
XOUT1-
RTS2
XOUT2-
CTLA
CTSA
DTRA
DSRA
CTLB
CTSB
DTRB
DSRB
S4
S3
S2
S1
DCDA
RTSA
RXA
TXA
DCDB
RTSB
RXB
TXB
RIN1-
CTS1
DSR1
RIN2-
CTS2
DSR2
C14 .0022
C12 .0022
C13 .0022
C6 .0022
C5 .0022
C9 .0022
SN75189
U77
U73
EIAIN1
EIAIN2
P1
P3
P4
THIS SHEET -0002 ONLY
D96214
2311052

APPENDIX B

XDS CONNECTIONS TO VARIOUS COMPUTER SYSTEMS AND TERMINALS

CONNECTION TO AN EIA MODEM

CONNECTION TO A TEXAS INSTRUMENT 990 COMPUTER

CONNECTION TO A VAX VT125 or VT100

CONNECTION TO A VAX 11/780

CONNECTION TO A TEKTRONIX C78500 – 8540

CONNECTION TO A HEWLETT PACKARD 64000

CONNECTION TO AN EIA MODEM VADIC VA3451 FROM PORT D OF THE XDS

1. WIRE LIST FOR INTERFACE CABLE

START STATION	FINISH STATION	REMARKS
P1 – 2	P2 – 2	TXD
3	3	RXD
4	4	RTS
5	5	CTS
6	6	DSR
7	7	GND
8	8	CD
20	20	DTR

P1 – XDS
P2 – TERMINAL

2. XDS SWITCH SETTINGS *

SWITCH	SETTING	SWITCH	SETTING
S1 – 7	1	S2 – 7	1
S1 – 6	0	S2 – 6	0
S1 – 5	1	S2 – 5	0
S1 – 4	0	S2 – 4	1
S1 – 3	0	S2 – 3	1
S1 – 2	1	S2 – 2	0
S1 – 1	0	S2 – 1	1

0 = OFF, 1 = ON

3. SPECIAL SETTINGS FOR THE MODEM INTERFACE

TXD – USED BY EMULATOR TO SEND DATA TO MODEM
RXD – USED BY MODEM TO SEND DATA TO EMULATOR
RTS – HELD HIGH BY EMULATOR
CTS – HELD HIGH BY MODEM
DSR – HELD HIGH BY EMULATOR
CD – HELD HIGH BY EMULATOR
DTR – HELD HIGH BY MODEM

* NOTE: For modem connection from Port A, use switches 3 and 4 instead of 1 and 2.

CONNECTION TO A HOST COMPUTER VIA PORT D OF THE XDS TEXAS INSTRUMENTS 990 COMPUTER

1. NAME AND MODEL OF COMPUTER: TEXAS INSTRUMENTS DS990, DX10 OPERATING SYSTEM, ALSO OTHER MEMBERS OF THE TI990 COMPUTER FAMILY.

2. INTERFACE MODULE CONNECTION IS MADE TO:

   NAME OF MODULE: TTY/EIA TERMINAL INTERFACE

   MANUFACTURE PART NUMBER: 945075 – 0001

   SPECIAL CONFIGURATION OF MODULE SUCH AS JUMPER WIRES OR SWITCH SETTINGS:

   EIA – E7, E9 – E8, E12 – E11, E17 – E18, E20 – E21, E26 – E25

3. WIRE LIST FOR INTERFACE CABLE

START STATION	FINISH STATION	REMARKS
P1 – 1	P2 – 1	CHASSIS GND
P1 – 2	P2 – 2	TX
P1 – 3	P2 – 3	RX
P1 – 7	P2 – 7	SIGNAL GND
P2 – 5	P2 – 8	JUMPER
P2 – 6	P2 – 28	JUMPER
P2 – 18	P2 – 20	JUMPER

P1 – XDS
P2 – HOST

   LIST JUMPER WIRES IN CABLE IF ANY AS PART OF THE WIRE LIST

4. XDS SWITCH SETTINGS

SWITCH	SETTING	SWITCH	SETTING
S1 – 7	0	S2 – 7	1
S1 – 6	0	S2 – 6	0
S1 – 5	1	S2 – 5	0
S1 – 4	1	S2 – 4	1
S1 – 3	0	S2 – 3	0
S1 – 2	0	S2 – 2	1
S1 – 1	1	S2 – 1	1

   0 = OFF, 1 = ON

5. PORT PARAMETERS SET UP WITH IMPORT COMAND

```
IPORT
  PORT (O = HOST, 1 = LOG) = 0                          = 0
  BAUD[19.2K, 9.6K, 4.8K, 2.4K, 1.2K, 600, 300, 110]    = 9.6K
  PARITY [0 = OFF, 1 = ODD, 2 = EVEN]                   = 0
  STOP BITS [0 = 2, 1 = 1]                              = 0
  BITS/CHAR[0 = 7, 1 = 8]                               = 0
```

6. CONTROL CHARACTER INITIALIZATION WITH IHC COMMAND
   NOT REQUIRED FOR THE TI 990 COMPUTER FAMILY. USE TI PROTOCOL FOR DOWNLOADING AND TI OR TI COMPRESSED FOR UPLOADING.

7. SYSTEM GENERATION INFORMATION

   DEVICE TYPE = ASR
   CRU = (DEPENDS ON BOARD PLACEMENT)
   ACCESS TYPE = RECORD
   TIME OUT = ____SECONDS
   CASSETTE ACCESS TYPE = FILE
   CHARACTER QUEUE SIZE = 20
   INTERRUPT = (DEPENDS ON BOARD PLACEMENT AND CHASSIS CONFIGURATION)
   CHASSIS = (DEPENDS ON BOARD PLACEMENT)
   POSITION = DEPENDS ON BOARD PLACEMENT)

CONNECTION TO AN EIA TERMINAL FROM PORT A OF THE XDS
VAX VT125 OR VT100

1. NAME AND MODEL OF THE TERMINAL: VAX VT125 VT100

2. WIRE LIST FOR INTERFACE CABLE

START STATION	FINISH STATION	REMARKS
P1 – 1	P2 – 1	CHASSIS GND
P1 – 2	P2 – 2	TX
P1 – 3	P2 – 3	RX
P1 – 7	P2 – 7	SIGNAL GND

P1 = XDS
P2 – TERMINAL

ONE TO ONE CONNECTION, ALL 25 PINS.

3. XDS SWITCH SETTINGS

SWITCH	SETTING	SWITCH	SETTING
S3 – 7	0	S4 – 7	0
S3 – 6	0	S4 – 6	1
S3 – 5	1	S4 – 5	1
S3 – 4	1	S4 – 4	0
S3 – 3	0	S4 – 3	0
S3 – 2	0	S4 – 2	1
S3 – 1	1	S4 – 1	1

0 = OFF, 1 = ON

4. SPECIAL SETTINGS FOR THE TERMINAL, JUMPERS, SWITCH SETTINGS, ECT.

SET TRANSMIT AND RECEIVE BAUD RATE TO 9600

SETUP SWITCHES ON VT100 AS FOLLOWS:
1101 0101 0000 0010

5. VAX CONFIGURATIN FOR VT100/VT125. THE TERMINAL DEFAULTS ARE TAKEN WITH THE FOLLOWING EXCEPTIONS.

NO HOST SYNC	ADVANCED-VIDEO	NO BRDCSTMBX
NO WRAP	NO ESCAPE	NO REGLS
SCOPE	NO TTSYNC	NO LOCAL ECHO
BRODCAST	NO REMOTE	NO DMA
NO HANGUP	NO EDIT MODE	NO AUTO BAUD
SET-SPEED	NO MODEM	NO TYPE_HD

CONNECTION TO A HOST COMPUTER VIA PORT D OF THE XDS
VAX 11/780

1. NAME AND MODEL OF COMPUTER: VAX11/780

2. INTERFACE MODULE CONNECTION IS MADE TO:
   NAME OF MODULE: DZ11 WITH A, B, AND C EXPANSION MODULESSDT

   MANUFACTURE PART NUMBER: NA

   SPECIAL CONFIGURATION OF MODULE SUCH AS JUMPER WIRES OR SWITCH SETTINGS:

   CONNECT PORT D TO DZ ON VAX. VAX PORT IS CONFIGURES FOR A VT100 TERMINAL.

3. WIRE LIST FOR INTERFACE CABLE

START STATION	FINISH STATION	REMARKS
P1 – 1	P2 – 1	CHASSIS GND
P1 – 2	P2 – 2	TXD TO EMU
P1 – 3	P2 – 3	RXT FR EMU
PI – 7	P2 – 7	SIGNAL GND
P1 – 8	P2 – 8	DCD

P1 – XDS
P2 – HOST

4. XDS SWITCH SETTINGS

SWITCH	SETTING	SWITCH	SETTING
S1 – 7	0	S2 – 7	0
S1 – 6	0	S2 – 6	1
S1 – 5	1	S2 – 5	1
S1 – 4	1	S2 – 4	0
S1 – 3	0	S2 – 3	0
S1 – 2	0	S2 – 2	0
S1 – 1	1	S2 – 1	0

0 = OFF, 1 = ON

5. PORT PARAMETERS SET UP WITH IPORT COMMAND

IPORT

PORT (0 = HOST, 1 = LOG) = 0	= 0
BAUD[19.2K, 9.6K, 4.8K, 2.4K, 1.2K, 600, 300, 110]	= 9.6K
PARITY [0 = OFF, 1 = ODD, 2 = EVEN]	= 0
STOP BITS[0 = 2, 1 = 1]	= 0
BITS/CHAR[0 = 7, 1 = 8]	= 0

6. CONTROL CHARACTER INITIALIZATION WITH IHC COMMAND
   IHC IS NOT REQUIRED FOR VAX, USE VAX PROTOCOL FOR UPLOAD AND DOWNLOAD

7. OPERATING SYSTEM SOFTWARE
   RELEASE: VAX/VMS VERSION V3.1

3. WIRE LIST FOR INTERFACE CABLE 64100A AND 64110A

START STATION	FINISH STATION	REMARKS
P1 – 1	P2 – 1	
2	2	
3	3	
4	4	
5	5	
6	6	
7	7	
8	8	
20	20	

P1 – XDS
P2 – HOST

4. XDS SWITCH SETTINGS

SWITCH	SETTING	SWITCH	SETTING
S3 – 7	1	S4 – 7	1
S3 – 6	1	S4 – 6	0
S3 – 5	0	S4 – 5	0
S3 – 4	0	S4 – 4	1
S3 – 3	1	S4 – 3	1
S3 – 2	1	S4 – 2	0
S3 – 1	0	S4 – 1	0

0 = OFF, 1 = ON

5. PORT PARAMETERS SET UP WITH IPORT COMMAND: NOT USED FOR PORT A

6. CONTROL CHARACTER INITIALIZATION WITH IHC COMMAND

IHC

DEPRESS KEY FOR DOWNLOAD START =
DEPRESS KEY FOR DWONLOAD END =
DEPRESS KEY FOR UPLOAD START =
DEPRESS KEY FOR UPLOAD END = CTRL – W
DEPRESS KEY FOR PASS THROUGH CHARACTER =

7. OPERATING SYSTEM SOFTWARE

RELEASE: STANDARD PACKAGE WITH 64100A AND 64110A.

CONNECTION TO A HOST COMPUTER VIA PORT A OF THE XDS
HEWLETT PACKARD 64000

1. NAME AND MODEL OF COMPUTER: HEWLETT PACKARD 64100A AND 64110A LOGIC DEVELOPMENT SYSTEMS

2. INTERFACE MODULE THAT IS USED IN MAKING THE CONNECTION.

   NAME OF PORT: RS232 "TO MODEM" PORT ON REAR PANEL

   MANUFACTURERS PART NUMBER: N/A

   SPECIAL CONFIGURATION OF MODULE SUCH AS JUMPER WIRES OR SWITCH SETTINGS:

   MODEL 64100A
   I/O CARD SWITCH IDENTIFICATION:

   S1, NOT USED

   S2, INT CLOCK (A & B RIGHT POSITION)

   S3, SELECT RS232 OPERATION (DOWN POSITION)

   S4, MODE SELECT SWITCHES

SWITCH	SETTING
S4-1	1
S4-2	1
S4-3	1
S4-4	1
S4-5	1
S4-6	0
S4-7	1
S4-8	1

   S5, BAUD RATE MAY BE SET FROM 300 TO 9600 BAUD.

   MODEL 64110A
   RS232 FLEX DRIVER CARD:

   S1, BAUD RATE MAY BE SET FROM 300 TO 9600 BAUD.

   S2, MODE SELECT SWITCHES

SWITCH	SETTING
S2-1	1
S2-2	1
S2-3	1
S2-4	1
S2-5	1
S2-6	0
S2-7	1

   CPU/IO CARD: INSTALL JUMPER IN J10 TERM POSITION.

8. SYSTEM GENERATION INFORMATION

TERMINAL SET UP:

AUTO LINE FEED?	NO
LOCAL ECHO?	NO
WAIT FOR ECHO DURING UPLOAD?	NO
DOWNLOAD START SEQUENCE (0-6 CHAR)?	" "
SOURCE END OF FILE CHARACTER?	17H
FORMAT USED FOR ABSOLUTE FILE TRANSFERS?	M_HEX
PROCESSOR DATA BUS WIDTH (#BITS)?	8
SMALLEST ADDRESSABLE ENTRY (#BITS)?	8
TYPE OF PROTOCOL?	XON_XOFF
UPLOAD PROMPT CHARACTER (0 = NONE)?	00H
XON CHARACTER?	11H
XOFF CHARACTER?	13H
DELAY TIME (nS) AFTER SENDING XOFF DURING DOWNLOAD?	0

9. TO UPLOAD FROM THE XDS

EXECUTE UPLOAD COMMAND.

UL

START ADDRESS	= USER DEFINED
END ADDRESS	= USER DEFINED
FORMAT [0 = TIO, 1 = TEK]	= 0
DATA (0 = WORD, 1 = HI BYTE, 2 = LOW BYTE)	= 0
DESTINATION [0 = HOST, 1 = PROM, 2 = USER]	= 2
PROTOCOL [0 = NONE, 1 = TEK, 2 = ASR, 3 = VAX]	= 0 (DO NOT ENTER CARRIAGE RETURN)

EXECUTE DOWNLOAD ON 64100A OR 64110A AND ENTER TWO CARRIAGE RETURNS.

A "?" WILL BE DISPLAYED BY THE XDS MONITOR WHEN THE UPLOAD IS COMPLETE.

10. TO DOWNLOAD TO THE XDS

EXECUTE THE DOWNLOAD COMMAND

DL

LOAD BIAS	= USER DEFINED
FORMAT [0 = TI, 1 = TEK]	= 0
DESTINATION [0 = MEMORY, 1 = PROM]	= 0
PROTOCOL [0 = NONE, 1 = TEK, 2 = ASR, 3 = VAX]	= 0
SOURCE [O = HOST, 1 = USER]	= 1

EXECUTE UPLOAD ON 64100A OR 64110A

A "?" WILL BE DISPLAYED BY THE XDS MONITOR WHEN THE DOWNLOAD IS COMPLETE.

October 1983
Revision *
1603443-9701
Printed in U.S.A.

TEXAS INSTRUMENTS

Creating useful products
and services for you.

SPDU017