SYM	REVISIONS	APPROVED	DATE

CONTROL LOGIC

IF ISC4+HRUN OCCUR, J60, J61, J62 J63, SEND CONTROL TO "T" FROM "A".

QUALIFIER MET (IQAM)
INHIBIT IF QUAL NOT MET (IIQN)
INHIBIT IF QUAL MET (IIQM)

100, X X X
F62 SET BY INSTRUCTION LOGIC
F61 SET FROM ROM (S/A
F60 SET FROM ROM (S/A

TO CALL SPECIAL PROGRAMS, SELECT IIQM, IIQN AND GUARANTEE THAT A QUALIFIER WILL BE MET (IQS7, IQC5).

EXECUTE ALL INSTRUCTIONS IN SPECIAL PROGRAM CALL, DONT SELECT ADDRESS LINES AS TYPE OF PROGRAM IS ENCODED IN QUALIFIER LINES, IQS3, IQS2, IQS1.

SELECT QUALIFIER LINES TO DEFINE TYPE OF SPECIAL PROGRAM. NOTE THAT BY SETTING THE 3 LSB OF "A" OR "Y" AND "S" AS COMPLEMENTS OF EACH OTHER NO GATING IS REQUIRED TO DIFFERENTIATE BETWEEN QUALIFIERS AND SPECIAL PROGRAM IDENTIFIERS, i.e, K's OCCURING OUT OF "A" OR "Y" HAVE NO EFFECT UNTIL EXECUTED IN "S".

NOTE:
(49) IQS1 RESETS F60
(51) IQS2 RESETS F61
(53) IQS3 RESETS F62
(55) IQS4 RESETS F02
(57) IQS5 RESETS F03
(59) IQS6 RESETS F04

CORDIC STEP INITIALIZE

PFF=12222
F52=0, F41=1
F40=1

CORDIC STEP CONTINUE

CORDIC CONSTANT

ISC1: IRDR TO SET BFF TO ALL 1'S J34, F23→F03, F22→F02. COMPLIMENTS F52 SETS F41=1.

IRDR GIVES J63, K65 K60
TURN SENSE AMPL. ON

ISC4 GIVES J25

INTIALIZE F03, F02

STORE DIRECTOR

READ DIRECTOR

READ PROG. COUNTER

SET UP 6 LSB OF NEXT CORDIC STEP

READ NEXT CORDIC STEP FROM CONSTANT LINES. INTO BFF

END OF CORDIC SEQUENCE
BFF = TRANSFER

07-00 RETURN TO MAIN PROGRAM

BFF = INDIRECT ADDRESS OF CONSTANT
CFF = LSD TO RECEIVE INFO

READ INDIRECT ADDRESS

READ CONSTAUT FROM ROM

CLEAR RECEIVING STATION

STORE CONSTANT

DECREMENT SFF BY ONE COUNT

COMPLEMENT SIGN

DISPLAY DECODE

SET CHARACTER DI INTO ROM ADDR.

TRANSFER VECTOR

PFF = 00122 VIA QS6, QS5, QS4 IN STATE S
READ TRANSFER VECTOR INTO PFF, SFF

FAST ADD

FAST ADD ENTRY CONDITIONS
SFF = 17B
AUGEND → BFF,
W F F SET TO ADDRESS ADDEND.
ITBS PUTS ADDEND IN SFF, ITSB SETS BFF = 17B FOR READ IN A2

ISAN GIVES K51 IF SOURCE FOR J62 IF FSI = 0, F65 = 1.

AS COUNTS SFF FROM AUGEND VALUE TO ZERO

(RIA)

INCREMENT ADDEND

NOTE:
START UP CIRCUIT FORCES CONTROL LOGIC TO D3.

RTV

ISCL SUMMARY CHART

S/A NO	33	25	27	31	29	21	23
CONSTANT LINE	IC06	IC05	IC04	IC03	IC02	IC01	IC00
MODE							
RIA (INDIRECT ADDR.)	F02	F01	F00	F13	F12	F11	F10
RTV (TRANSFER VECT)	F02	F01	F00	F13	F12	F04	F03
RCB (CONSTANT→BFF		F25	F24	F23	F22	F21	F20

ENTRIES SHOW WHICH FLIP-FLOPS ARE COMPLIMENTED WHEN IN RIA, RTV, RCB MODES.

RIA, RTV OCCUR IN E65 OR E85 RESPECTIVELY.
RIA & RTV SEPARATED FROM RCB BY IHIB & IHIPS.

ENG. RESP. — DIV.	ITEM	QTY	DESCRIPTION		PART NO.	DWG. NO.	MAT'L SPEC.
UNLESS OTHERWISE NOTED — TOLERANCES — 0.XX ±0.02 0.XXX ±0.005 ANGULAR ± MACHINED SURFACES 63 — DO NOT SCALE —			DRAWN JOHN SCOHY	DATE 8-26-69	TITLE FLOW CHART— CONTROL LOGIC	HEWLETT PACKARD LABORATORY INSTRUMENTS	
			ENGINEER			NEXT ASSY. 91008	
			APPROVED			D-09100-90370-1	
			SUPERSEDES		FINISH SCALE		

SYM	REVISIONS	APPROVED	DATE

FIXED POINT ALGORITHIM

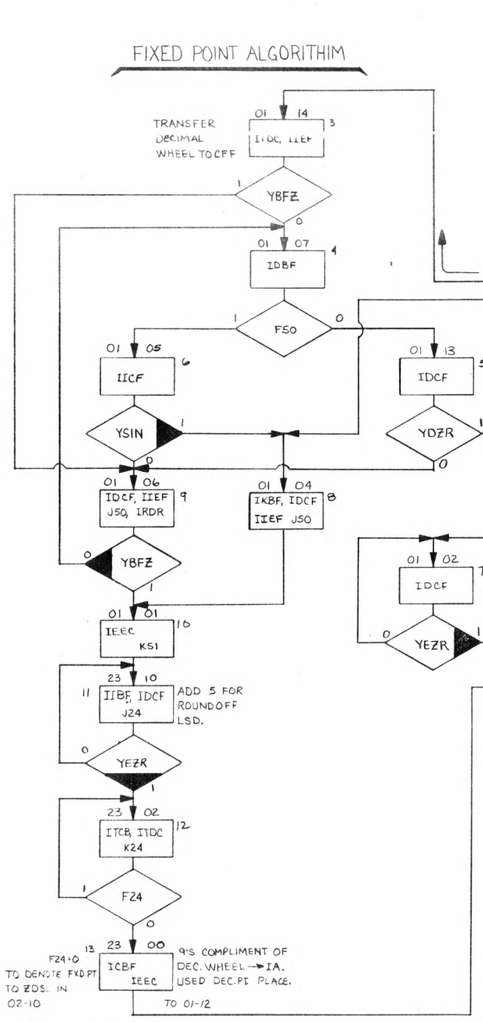

CHARACTER	BFF AT 00-07 RIGHT HALF (F50=0	LEFT HALF (F50=1)
0	0 0 0 0 0 1 0 0 0 0 0	0 0 0 1 0 0
1	0 0 0 1 1 1 0 0 0 0 0	0 1 1 1 1 1
2	0 0 1 0 0 1 1 0 0 0 0	0 0 0 1 0 0
3	0 0 1 1 0 1 0 0 0 0 0	0 0 1 0 1 0
4	0 1 0 0 0 1 0 0 0 0 0	0 1 1 0 0 1
5	0 1 0 1 0 1 0 0 1 0 0	0 0 1 0 0 0
6	0 1 1 0 0 1 0 0 1 0 0	0 0 0 0 0 0
7	0 1 1 1 0 1 0 0 0 0 0	0 1 1 1 1 0
8	1 0 0 0 0 0 1 0 0 0 0	0 0 0 0 0 0
9	1 0 0 1 0 1 0 0 0 0 0	0 0 1 0 0 0
−	1 0 1 0 0 1 1 1 0 1 0	0 1 1 0 1 1
⊟	1 0 1 1 0 1 0 0 0 0 0	0 0 0 0 1 0
b	1 1 0 0 0 1 0 0 1 0 0	0 0 0 0 0 1
*	1 1 0 1 0 1	0 0 1 1 1 1
C	1 1 1 0 0 1 1 1 0 1 0	0 0 0 0 1 1
d	1 1 1 1 0 1 0 0 0 0 0	0 0 0 0 1 1
BLANK/+	1 1 1 1 0 1 1 1 0 1 0	0 1 1 1 1 1
	D5 D4 D3 D2 D1 D0 G1 G0 E5 E1 E0	D5 D4 D3 D2 D1 D0 G1 G0 E5 E1 E0

BLANK/+ HAVE F25 = 1, REST HAVE F25 = 0

F25 = 1 TO SHIFT FIGURE 1 TO LEFT

DISPLAY DECODE (BFF AT 03-00)

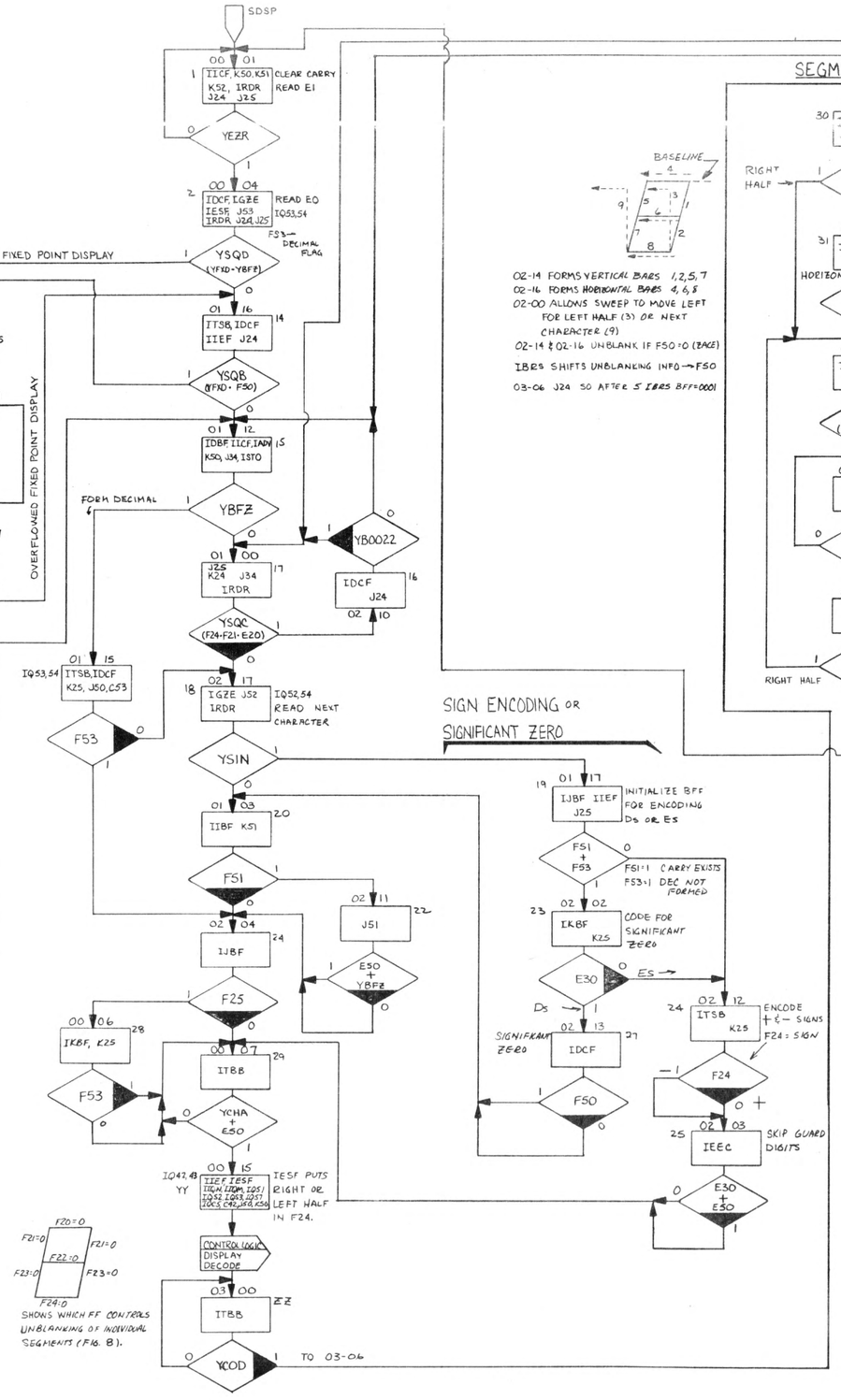

SIGN ENCODING OR SIGNIFICANT ZERO

SEGMENT GENERATORS

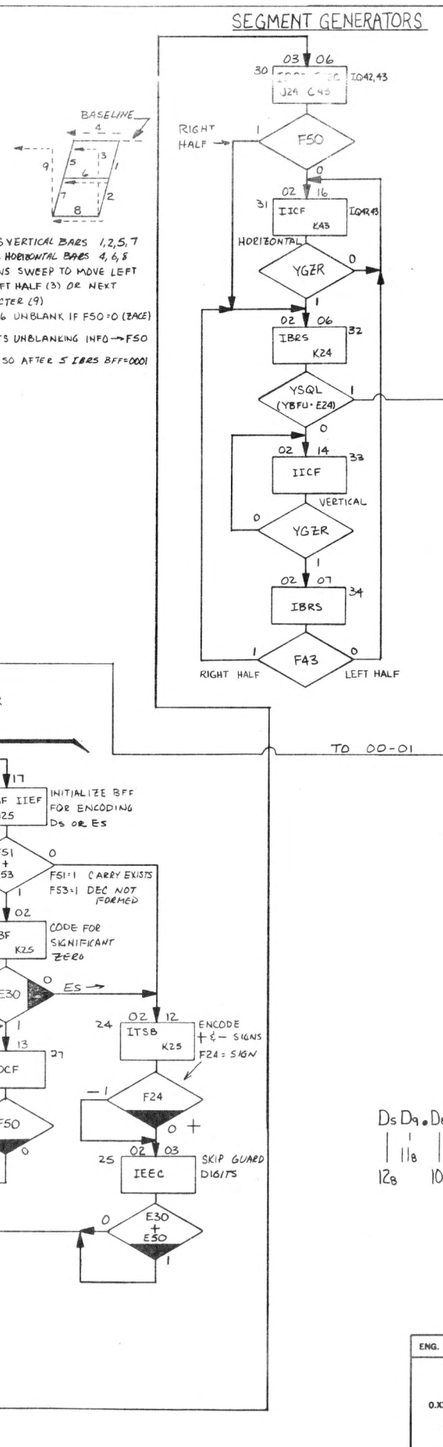

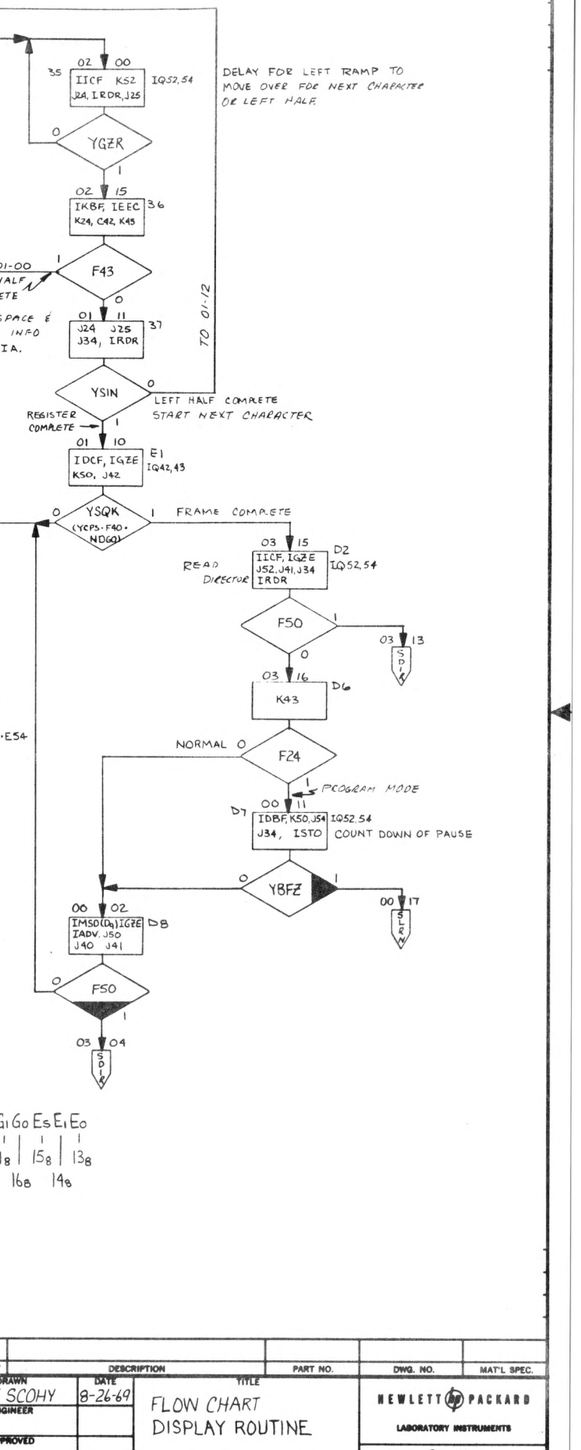

D_5	D_9	D_8	D_7	D_6	D_5	D_4	D_3	D_2	D_1	D_0	G_1	G_0	E_5	E_1	E_0
	11_8		7_8		5_8		3_8		1_8		17_8		15_8		13_8
12_8		10_8		6_8		4_8		2_8		0_8		16_8		14_8	

ENG. RESP. — DIV.						
UNLESS OTHERWISE NOTED — TOLERANCES — 0.XX ±0.02 0.XXX ±0.005 ANGULAR ± — MACHINED SURFACES 63 — DO NOT SCALE —	ITEM	QTY	DESCRIPTION	PART NO.	DWG. NO.	MAT'L SPEC.
	DRAWN JOHN SCOHY	DATE 8-26-69	TITLE FLOW CHART DISPLAY ROUTINE		HEWLETT PACKARD LABORATORY INSTRUMENTS	
	ENGINEER				NEXT ASSY. 9100B	
	APPROVED				D-09100-90370-2	
	SUPERSEDES		FINISH	SCALE		

SYM	REVISIONS	APPROVED	DATE
	REDRAWN — NO CHANGE		

D-09100-90370-3

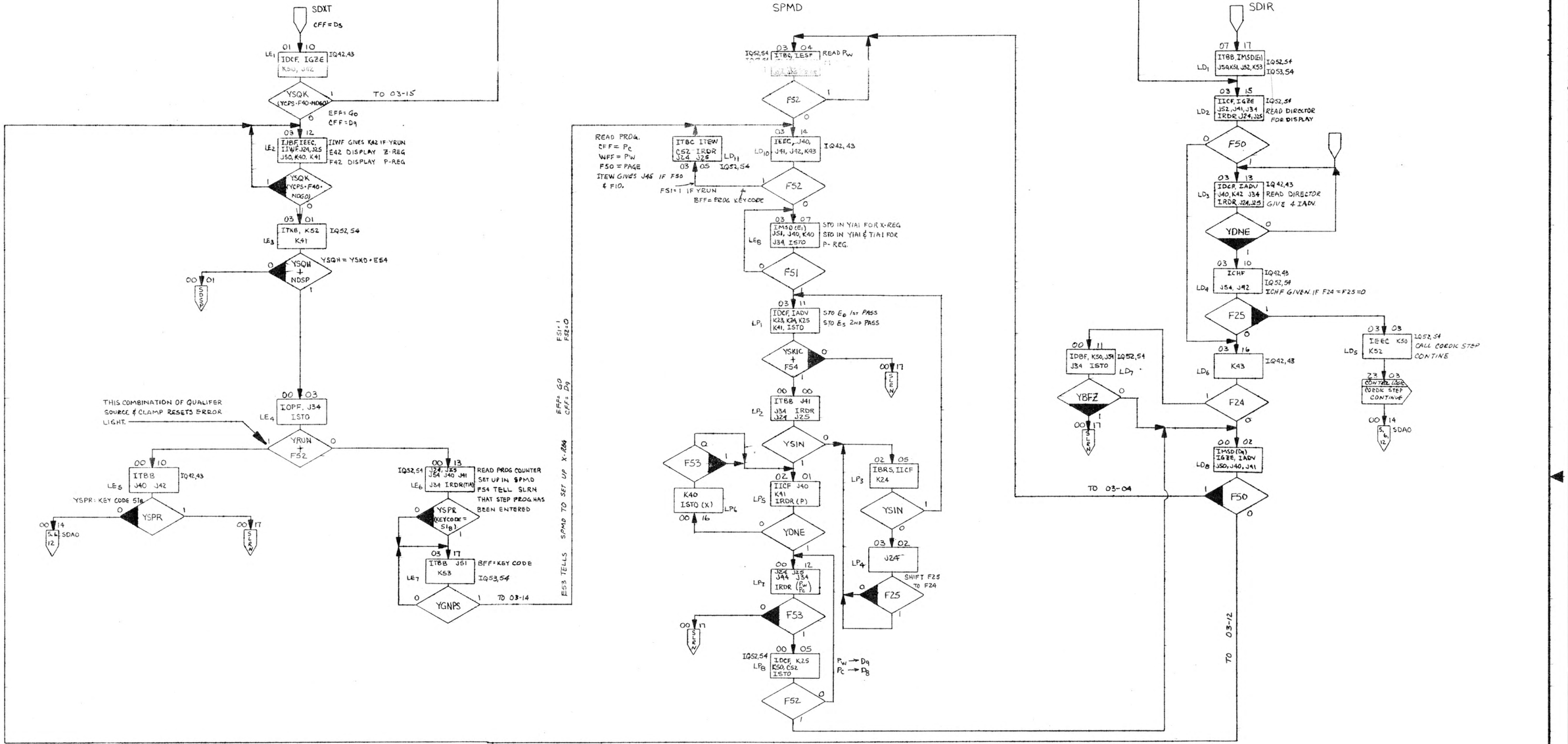

ENG. RESP. — DIV.	ITEM	QTY	DESCRIPTION	PART NO.	DWG. NO.	MAT'L SPEC.
UNLESS OTHERWISE NOTED — TOLERANCES — 0.XX ±0.02 0.XXX ±0.005 ANGULAR ± MACHINED SURFACES 63 — DO NOT SCALE —						
DRAWN JOHN SCOHY	DATE 8-27-69	TITLE SUBROUTINE - DISPLAY EXIT SUBROUTINE - DIRECTOR SUBROUTINE - PROG. MODE DISP.		HEWLETT PACKARD LABORATORY INSTRUMENTS		
ENGINEER				NEXT ASSY. 91008		
APPROVED				D-09100-90370-3		
SUPERSEDES		FINISH	SCALE			

SYM	REVISIONS	APPROVED	DATE

DIR. = F34 F52 F40 F41 E44
SOM = F34 F52 E40 E41 E44

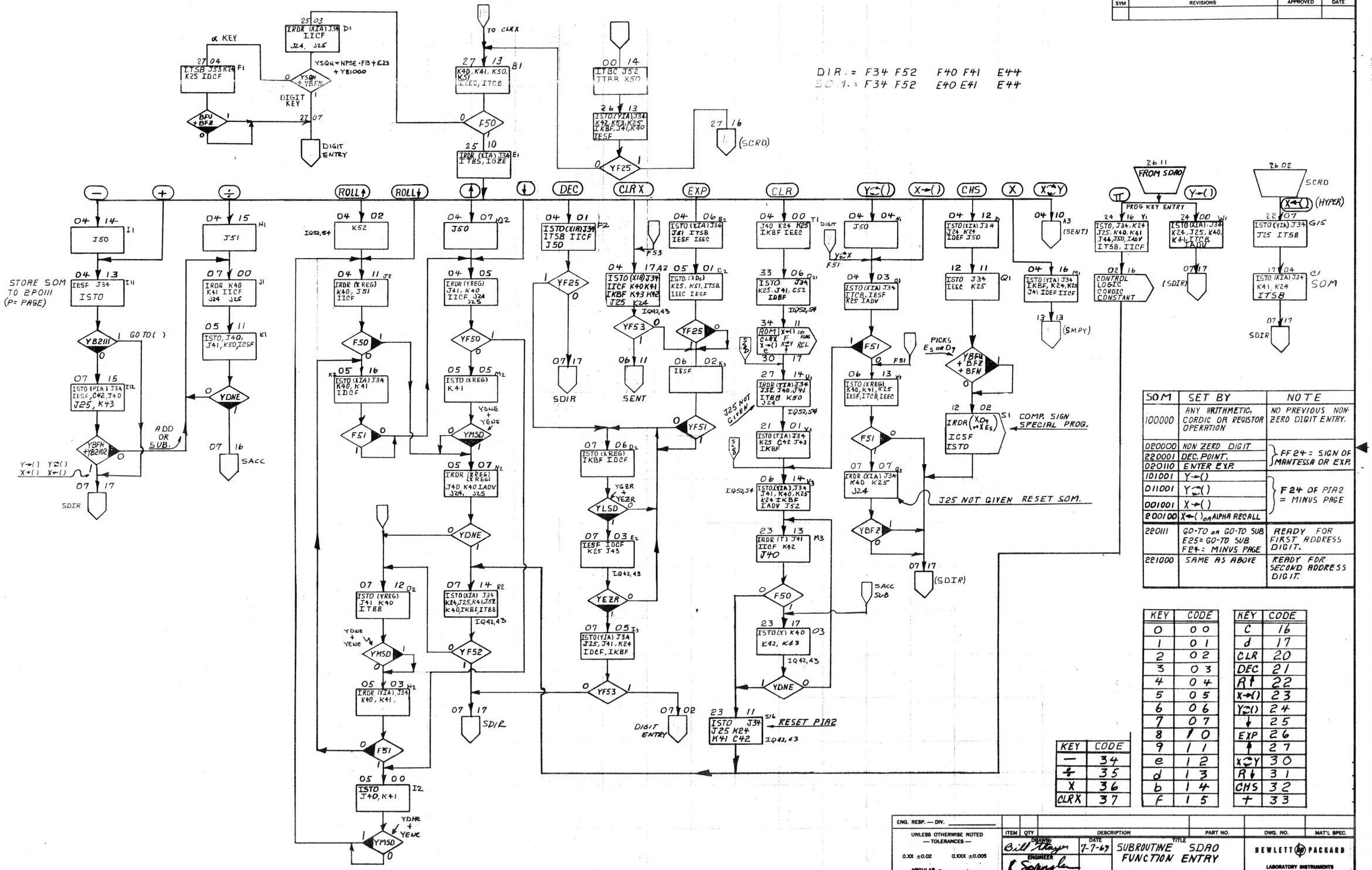

SOM	SET BY	NOTE
100000	ANY ARITHMETIC, CORDIC OR REGISTOR OPERATION	NO PREVIOUS NON-ZERO DIGIT ENTRY.
020000	NON ZERO DIGIT	FF24 = SIGN OF MANTESSA OR EXP.
220001	DEC. POINT.	
020110	ENTER EXP.	
101001	Y→()	F24 OF PIA2 = MINUS PAGE
011001	Y⇄()	
001001	X→()	
200100	X←() OR ALPHA RECALL	
220111	GO-TO OR GO-TO SUB E25 = GO-TO SUB F24 = MINUS PAGE	READY FOR FIRST ADDRESS DIGIT.
221000	SAME AS ABOVE	READY FOR SECOND ADDRESS DIGIT.

KEY	CODE
0	00
1	01
2	02
3	03
4	04
5	05
6	06
7	07
8	10
9	11
e	12
d	13
b	14
F	15

KEY	CODE
C	16
d	17
CLR	20
DEC	21
R↑	22
X→()	23
Y⇄()	24
↓	25
EXP	26
↑	27
X⇄Y	30
R↓	31
CHS	32
+	33

KEY	CODE
−	34
÷	35
X	36
CLRX	37

ENG. RESP. — DIV.

UNLESS OTHERWISE NOTED — TOLERANCES —
0.XX ±0.02 0.XXX ±0.005
ANGULAR ±
MACHINED SURFACES 63
— DO NOT SCALE —

ITEM	QTY	DESCRIPTION	PART NO.	DWG. NO.	MAT'L SPEC.

DRAWN Bill Mayer DATE 7-7-69
ENGINEER
APPROVED
SUPERSEDES

TITLE SUBROUTINE SDAO FUNCTION ENTRY
9100B

NEXT ASSY. 9100B
FINISH SCALE
D-09100-90370-4

SYM	REVISIONS	APPROVED	DATE

FUNCTION ENTRY

27 07 F3 ITBS IESF — IESF TO SAVE SIGN OF SOM.

X←() ∝ KEYS

X→() Y→() Y⇄()

DEC. NOT SET | DEC. SET | EXP. | FIRST ADDRESS DIGIT | SECOND ADDRESS DIGIT

X⇄Y

FROM SDAO 25-10

04 10 A3 IRDR (X REG) JS0, J51 IDCF J24, J25

X⇄Y F53

X←() RECALL INTO X

06 16 B3 IRDR (↓REG) ITEW J24 J25 IDCF K51

06 05 D3 ISTO (TREG) J40, J41

T REG IS USED FOR TEMP STORAGE IN EXCHANGE OPERATIONS

YDNE + YENE → YMSD

05 14 E3 IRDR (YREG) K40, J41, K43 J24, J25 J42 — IQ42,43

F53

05 17 G3 K41, K42, K43, J51 — IQ42,43

F51

Y→()

Y⇄()

F53

06 03 ISTO(XREG) K40, K41, J51 U3

YDNE

04 03 IGTO IJ34 ITCB IESF IK25 IADV 01

YF51

FUNCTION ENTRY (SDAO) 06 13

RESET YIA

06 04 ISTO, J34, K25 IDCF, K24, K40 IKBF, C43, J42 J53, J41

04 17 ISTO (XIA) J34 IKBF, J25, K24 IICF, K40, K41 K42, K43

F53

06 02 6 FUNCTION ENTRY (SDAO)

X→() Y→() Y⇄()

06 11 IRDR(PIA2)J34 J54 C42 J40 — BIT 25 OF PIA2 IS GUARANTEED TO BE 1 — IQ42,43 IQ53,54

05 06 L18 IK54 — IQ53,54

J25 NOT GIVEN STATE OF FF25 PRESERVED THRU THE "RDR" SIGN OF PIA2 IS ALL THAT IS REQ.

F24 — E54 SETS MINUS PAGE WHEN ITEW IS GIVEN

RESET PIA2.

05 13 L19 ISTO(PIA2)J34 J25, K24 IDCF — CFF→D7

Y→() F25

06 17 C3 IRDR (XREG) K40 K41 IDCF J24, J25

F51

YS() F50

X→() Y→() YS()

06 12 H3 ISTO (↓) ITEW

YDNE

06 14 ISTO, J34, J41 K40, IKBF, K25 K24, ADV, J52 V3 — RESET YIA2 — IQ52,54

23 11 S16 J25, K24, J34 ISTO, K41 C42 — RESET PIA2 — IQ52,43

07 14 ISTO(XIA) J34 K24, J25, K41, J52 K40, IKBF, ITBB 02 — SET S.O.M. TO 100000 — IQ52,54

YF52

07 12 FUNCTION ENTRY (SDAO)

07 17 (SDIR)

8 E50 — TRANSFER T TO Y TO COMPLETE X⇄Y AND Y⇄()

23 13 IRDR (T) J40, J41 IICF K42 H3 — IQ42,43 IQ47,43

YF50 SACC SUB

23 17 ISTO K40 K42 K43 03 — IQ42,43

YDNE

DEC. NOT SET

06 00 J3 K24 J51 J53 — IQ53,54

F25

NO PREVIOUS ENTRY

06 02 K3 IESF

F51

07 06 D2 ISTO (XREG) IKBF IDCF

YGER + YEER → YLSD

07 03 E2 IESF IDCF K25 J43 K42

YEER

07 05 I3 ISTO(YIA) J34 J25 K24 IKBF J41 IDCF

RESET YIA

F53

07 17 (SDIR)

DEC. SET

06 01 Y3 IRDR (XE1) IICF, J24, K51

J25 NOT GIVEN

F51

F25

UP DATE EXP.

INCR. EXP

07 10 N3 ISTO(XE1) IIBF J53 — IQ53,54

F53

07 13 Z3 IDCF

YENE

06 15 X3 IRDR (XDI) J24 J25 IDCF, K40

YGER

07 02 P3 IEEC J51

F25

DIGIT ENTRY LOCATION AT F25=1

06 13 W3 ISTO (XREG) ITCB, K40, K41 IESF, K25, IEEC

F51

J25 NOT GIVEN

07 07 Q3 IRDR(XIA) J34 K40 K25 J24

RESET F25 OF SOM AFTER NON-ZERO DIGIT ENTRY

YBIZ

07 17 (SDIR)

EXP.

06 06 S3 IRDR(XE0) IICF J24 — J25 NOT GIVEN

20 00 T3 ISTO (XE1) J53 IESF IICF — IQ53,54

07 05 I3 ISTO(YIA)J34 J25 K24 J41 IDCF IKBF

F53

07 17 (SDIR)

FIRST ADDRESS DIGIT

06 07 LI3 ISTO(XIA), J34 IIBF, IESF IEEC

11 15 LI4 ISTO(PIA2)J34 J25 ITCB J40 C42 K43 — STORE FIRST DIGIT IN PIA2

07 17 (SDIR)

SECOND ADDRESS DIGIT

06 10 (SUB)

REINITIALIZE SOM TO SP1000, S=1 FOR GO TO S=0 FOR GO TO P: PAGE

SOM

FUNCTION	53	52	51	50	XIA
X⇄Y	0		1	1	10
X→()	0		0	0	11
X←()	1		0	0	04
Y→()	0		0/1	0	11
Y⇄()	0		0/1	1	11
DEC NOT SET	1		2	2	00
DEC. SET	1		2	2	01
EXP	1		0	2	06
CLR X	0		0	2	.

ENG. RESP. — DIV. 9

UNLESS OTHERWISE NOTED — TOLERANCES — 0.XX ±0.02 0.XXX ±0.005 ANGULAR ± — MACHINED SURFACES 63 — DO NOT SCALE —

ITEM	QTY	DESCRIPTION	PART NO.	DWG. NO.	MAT'L SPEC.

DRAWN BILL THAYER DATE 7-7-69

ENGINEER R Spangle

APPROVED

SUPERSEDES

TITLE SENT DIGIT ENTRY 9100B

FINISH SCALE

HEWLETT PACKARD LABORATORY INSTRUMENTS

NEXT ASSY. 9100B

D-09100-90370-5

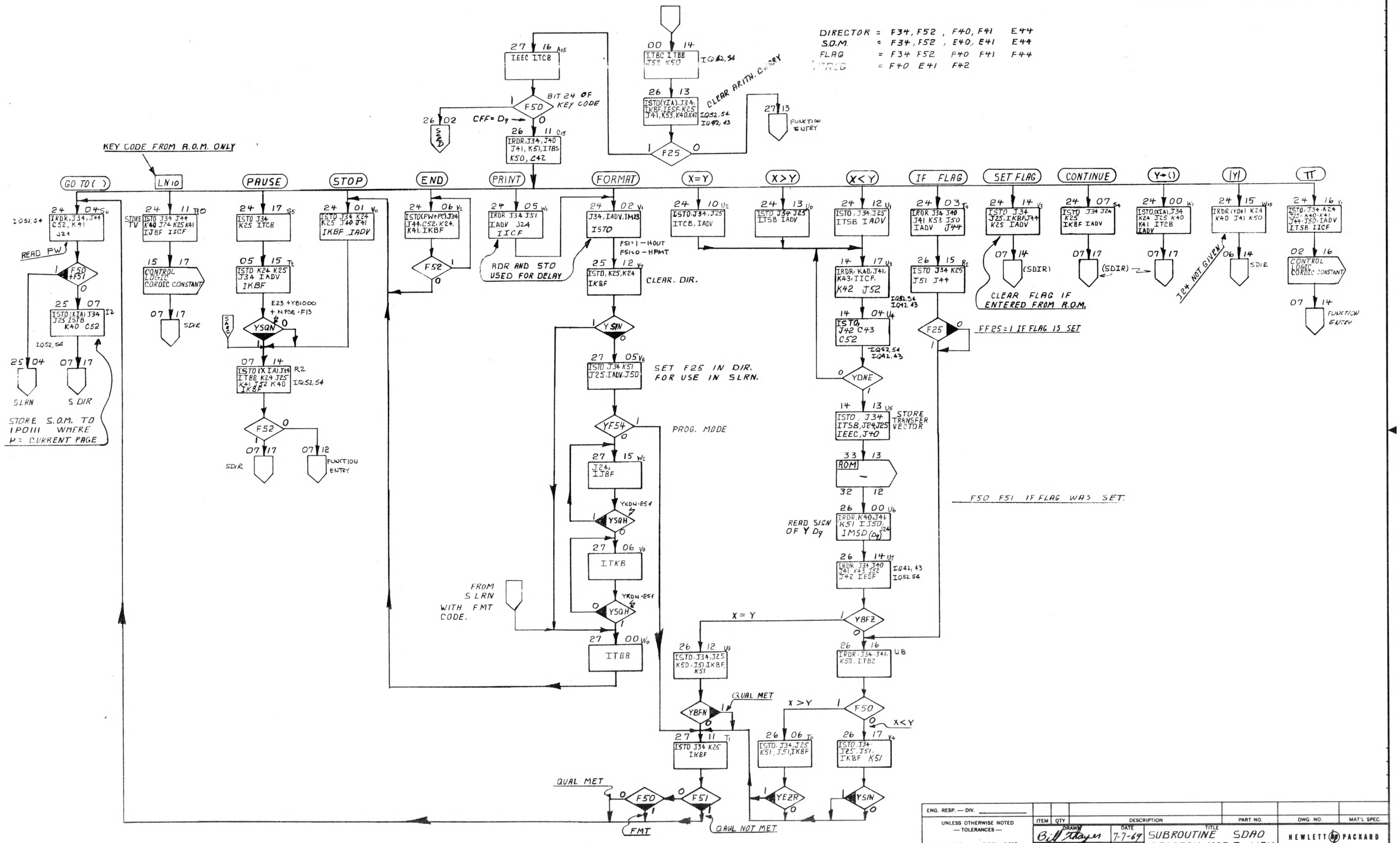

ENG. RESP. — DIV.	ITEM	QTY	DESCRIPTION	PART NO.	DWG. NO. / MAT'L SPEC.
UNLESS OTHERWISE NOTED — TOLERANCES — 0.XX ±0.02 0.XXX ±0.005 ANGULAR ± MACHINED SURFACES 63 — DO NOT SCALE —	DRAWN Bill Thayer ENGINEER R Spangler APPROVED SUPERSEDES	DATE 7-7-69	TITLE SUBROUTINE SDAO PROGRAM MODE KEY PORTION. 9100B FINISH SCALE		HEWLETT PACKARD LABORATORY INSTRUMENTS NEXT ASSY. 9100B D-09100-90370-6

SYM	REVISIONS	APPROVED	DATE

STORING AND RETURNING OF THE SUBROUTINE RETURN PROG. STEP IN THE "P" REGISTOR.

P REG = E44, E43, F42, E41, F40.

P_W STORED IN +5IA1 (F34 E52 F44, E43, F42, E41, F40)

P_C STORED IN +5IA2 (F34 F52 " " " ")

GO TO SUB

READ	ADD.	STORE	ADD.
E_S	23-01	E_0 *	23-12
G_0	" "	E_1 *	" "
G_1	" "	E_S *	" "
D_0	" "	G_0	" "
D_1	" "	G_1	" "
D_2	" "	D_0	" "
D_3	" "	D_1	" "
D_4	" "	D_2	" "
D_5	" "	D_3	" "
D_6	" "	D_4	" "
D_7	" "	D_5	" "
D_8	" "	D_6	" "
D_9	" "	D_7	" "

SUB-RETURN

READ	ADD	STORE	ADD
E_0	23-14	E_S *	23-12
D_S	" "	E_1 *	" "
D_9	" "	E_0 *	" "
D_8	" "	D_S *	" "
D_7	" "	D_9	" "
D_6	" "	D_8	" "
D_5	" "	D_7	" "
D_4	" "	D_6	" "
D_3	" "	D_5	" "
D_2	" "	D_4	" "
D_1	" "	D_3	" "
D_0	" "	D_2	" "
G_1	" "	D_1	" "
G_0	" "	D_0	" "
E_S	" "	G_1 *	" "
E_1	" "	G_0 *	23-12
		P_W *	23-03
E_0	" "	E_S *	23-12
		P_W *	23-03
D_S	" "	E_1 *	23-12
		P_W *	23-03
D_9	23-14	P_W	23-03
D_8	23-07	P_C	23-04

NOTE: * = DON'T CARE STORE.

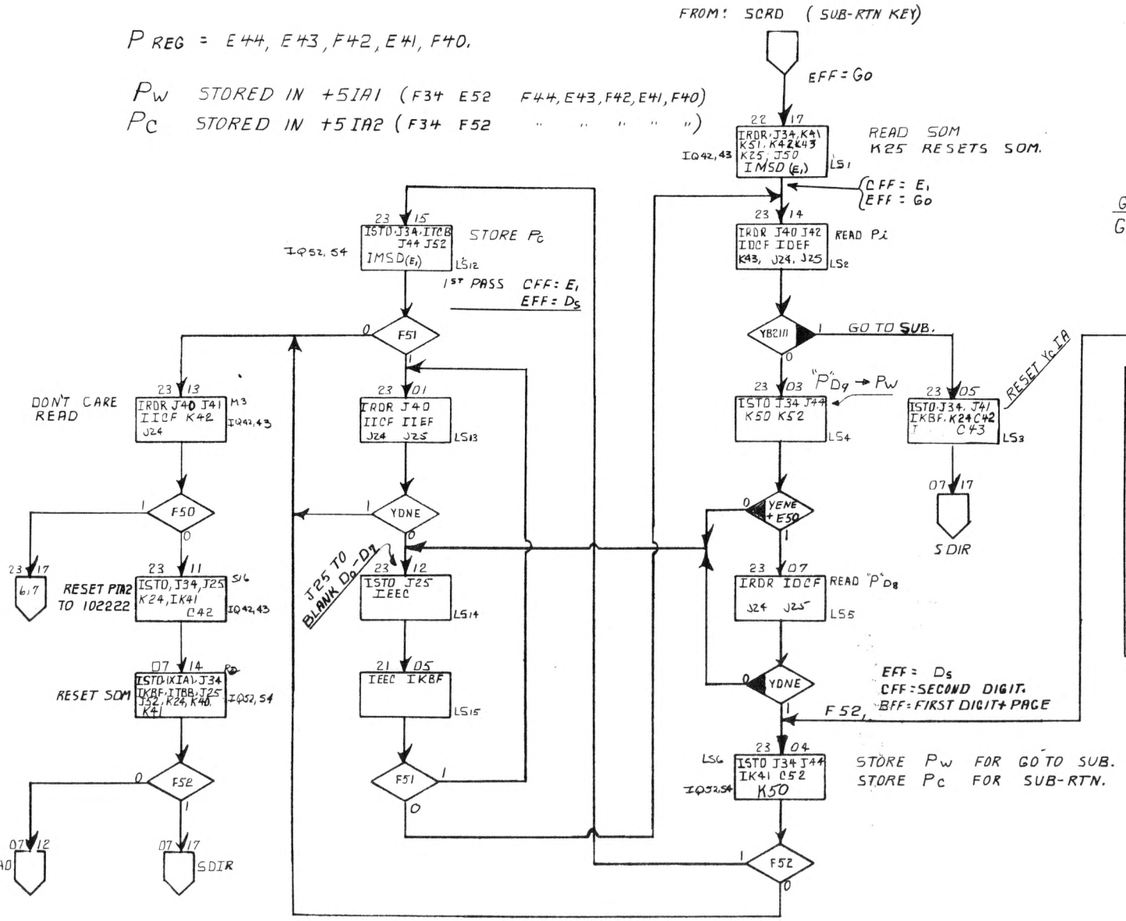

FIRST DIGIT = P_W = D_9

SECOND DIGIT = P_C = D_8

ENG. RESP. — DIV.						
UNLESS OTHERWISE NOTED — TOLERANCES — 0.XX ±0.02 0.XXX ±0.005 ANGULAR ± MACHINED SURFACES 63 — DO NOT SCALE —	ITEM	QTY	DESCRIPTION	PART NO.	DWG. NO.	MAT'L SPEC.
DRAWN Bill Thayer DATE 7-7-69 ENGINEER R Spangler APPROVED SUPERSEDES	TITLE SUBROUTINE SUB/RETURN 9100B FINISH SCALE				HEWLETT PACKARD LABORATORY INSTRUMENTS NEXT ASSY. 9100B D-09100-90370-7	

SYM	REVISIONS	APPROVED	DATE

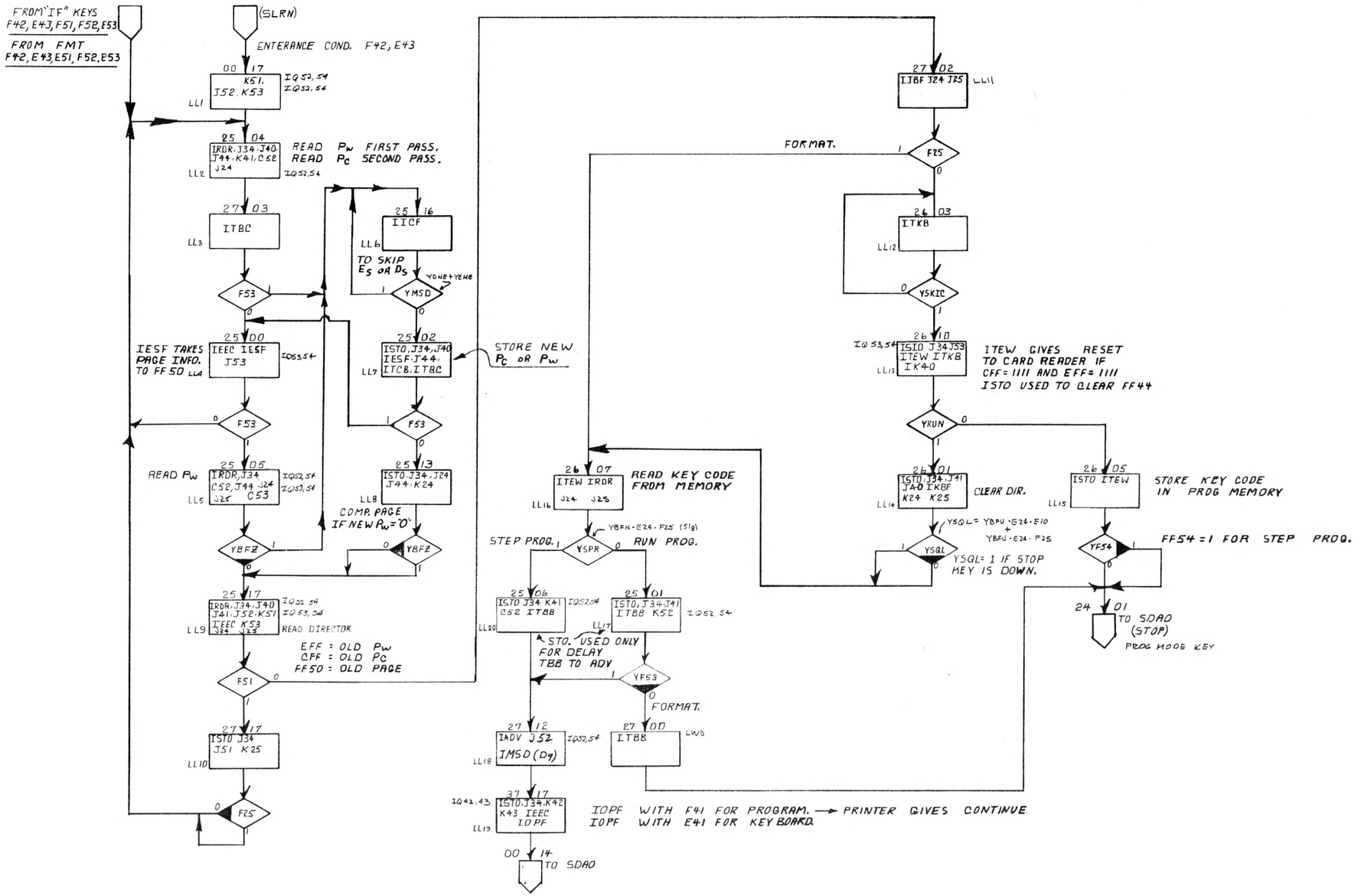

ENG. RESP. — DIV.	ITEM	QTY	DESCRIPTION	PART NO.	DWG. NO.	MAT'L SPEC.
UNLESS OTHERWISE NOTED — TOLERANCES — 0.XX ±0.02 0.XXX ±0.005 ANGULAR ± MACHINED SURFACES 63 — DO NOT SCALE —	DRAWN AL HOWARD	DATE 7-7-69	TITLE SUBROUTINE-LEARN		HEWLETT PACKARD LABORATORY INSTRUMENTS	
	ENGINEER R Spangler					
	APPROVED		9100B		NEXT ASSY. 9100B	
	SUPERSEDES		FINISH	SCALE	D-09100-90370-8	

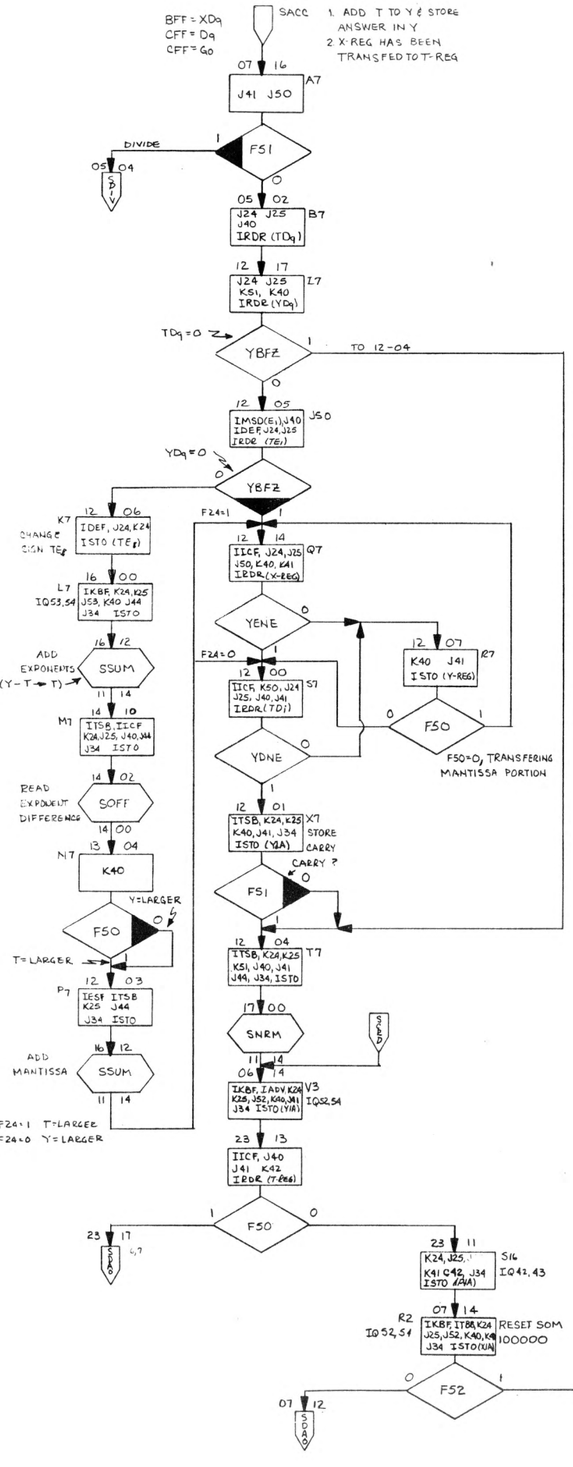

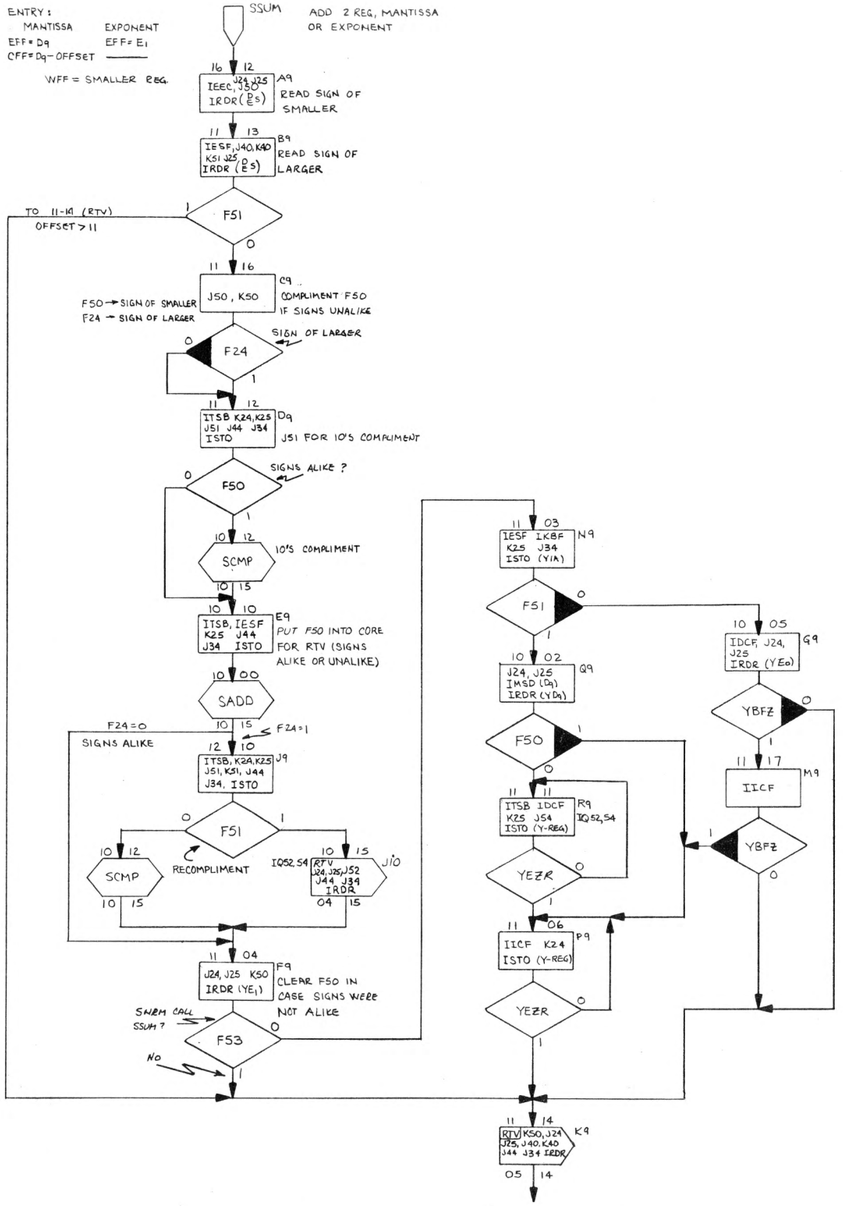

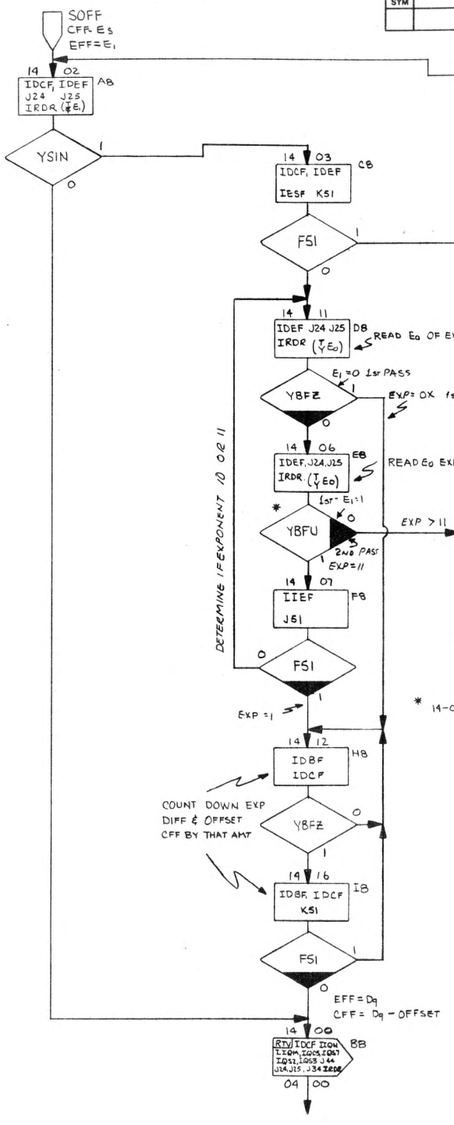

SYM	REVISIONS	APPROVED	DATE

D-09100-90370-9

ENG. RESP. — DIV.	ITEM	QTY	DESCRIPTION	PART NO.	DWG. NO.	MAT'L SPEC.
UNLESS OTHERWISE NOTED — TOLERANCES — 0.XX ±0.02 0.XXX ±0.005 ANGULAR ± MACHINED SURFACES 63 — DO NOT SCALE —						

DRAWN	DATE	TITLE		
JOHN SCOHY	8-28-69	SUBROUTINE-ACCUMLATE		
ENGINEER RICK SPANGLER		SUBROUTINE - SUM		
APPROVED		SUBROUTINE - OFFSET		
SUPERSEDES		FINISH	SCALE	

HEWLETT PACKARD
LABORATORY INSTRUMENTS

NEXT ASSY. 9100B

D-09100-90370-9

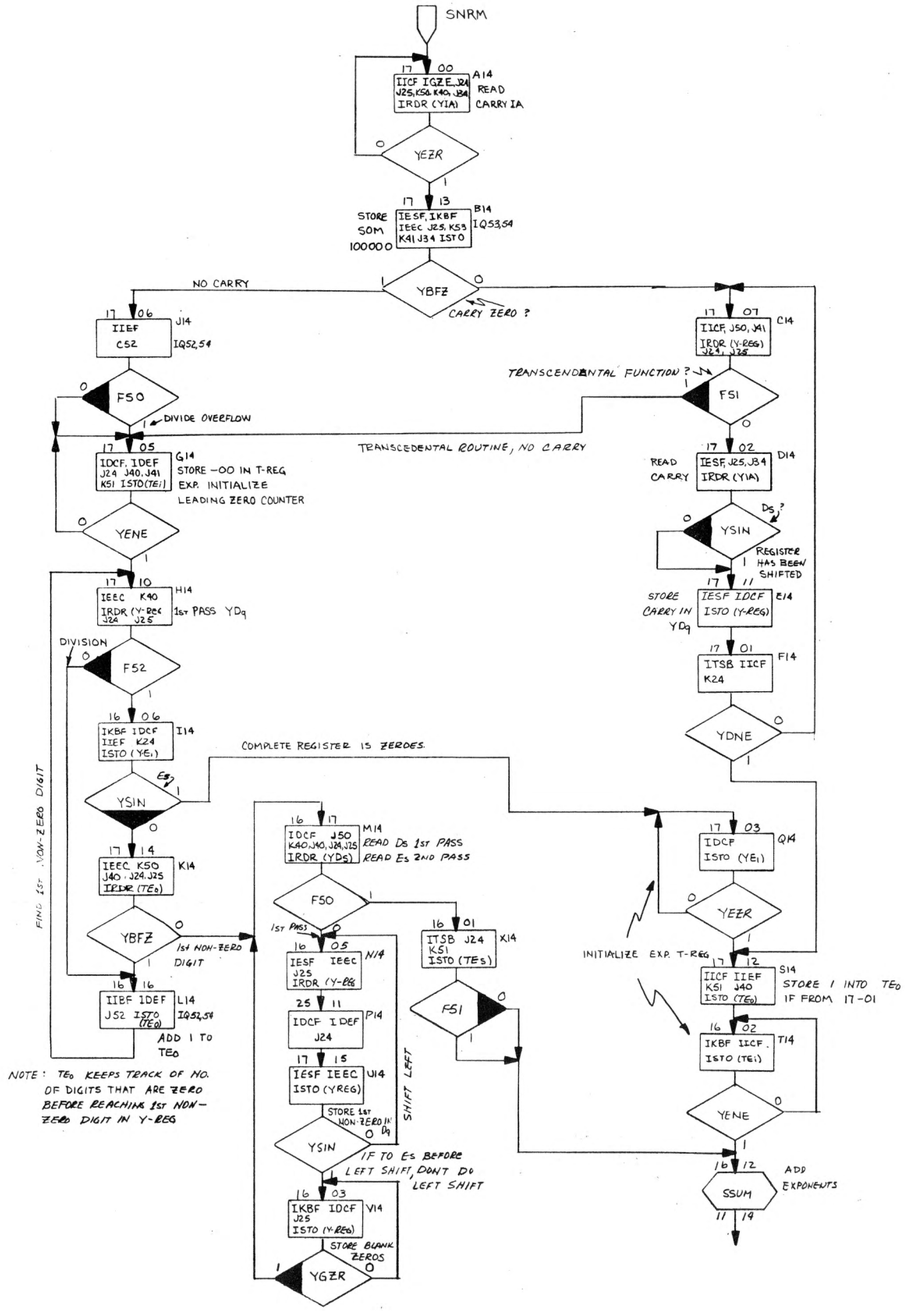

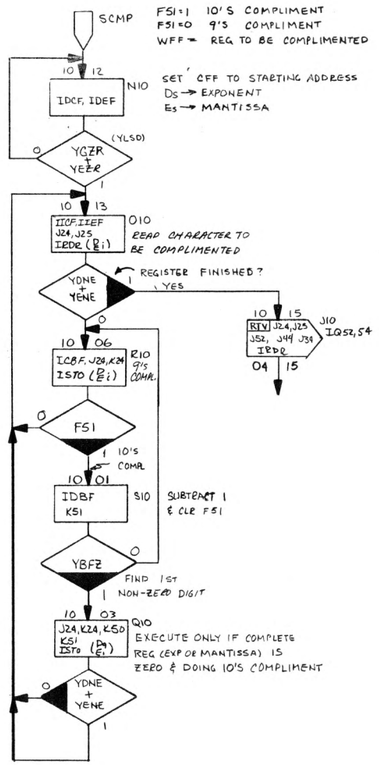

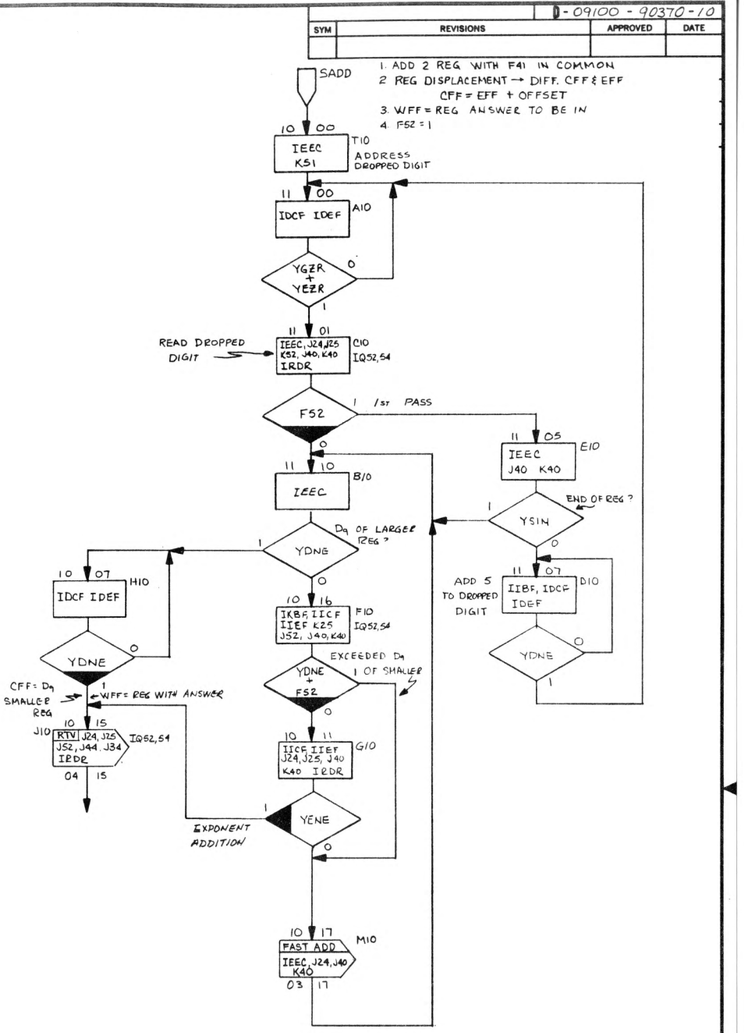

ENG. RESP. — DIV.

UNLESS OTHERWISE NOTED — TOLERANCES —
0.XX ±0.02 0.XXX ±0.005
ANGULAR ±
MACHINED SURFACES 63
— DO NOT SCALE —

ITEM	QTY	DESCRIPTION	PART NO.	DWG. NO.	MAT'L SPEC.

DRAWN: JOHN SCOHY — DATE: 8-28-69
ENGINEER: RICK SPANGLER
APPROVED:
SUPERSEDES:

TITLE:
SUBROUTINE-NORMALIZE
SUBROUTINE-COMPLIMENT
SUBROUTINE-ADD

FINISH: SCALE:

HEWLETT PACKARD
LABORATORY INSTRUMENTS

NEXT ASSY. 9100B

D-09100-90370-10

SYM	REVISIONS	APPROVED	DATE

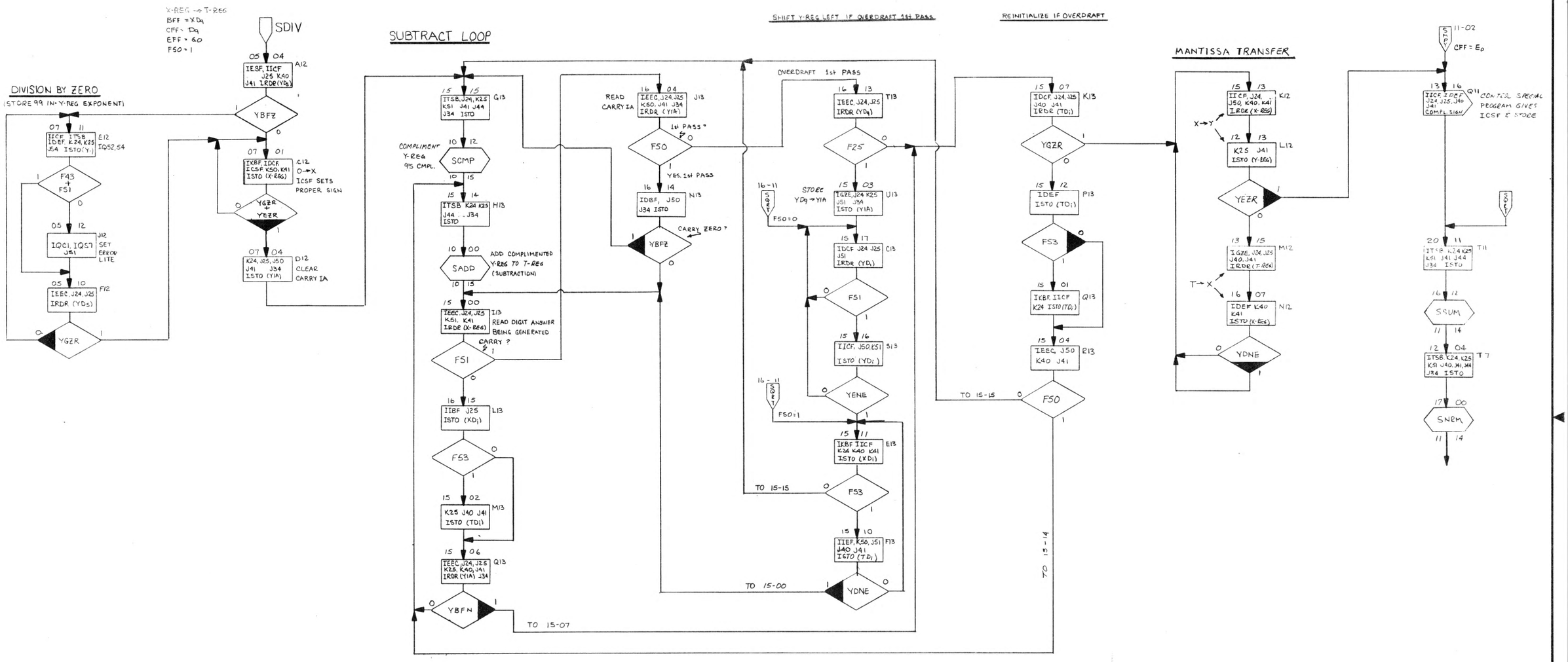

SDIV:

1 SUCCESSIVELY SUBTRACT T-REG FROM Y-REG ENTERING THE NUMBER OF TIMES THE SUBTRACTION IS ACCOMPLISHED WITHOUT OVERFLOW INTO X-REG.

ENG. RESP. — DIV.						
UNLESS OTHERWISE NOTED — TOLERANCES — 0.XX ±0.02 0.XXX ±0.005 ANGULAR ± MACHINED SURFACES 63 — DO NOT SCALE —	ITEM	QTY	DESCRIPTION	PART NO.	DWG. NO.	MAT'L SPEC.
DRAWN JOHN SCOHY	DATE 9-3-69	TITLE SUBROUTINE – DIVIDE			HEWLETT PACKARD LABORATORY INSTRUMENTS	
ENGINEER RICK SPANGLER					NEXT ASSY. 9100B	
APPROVED					D-09100 -90370 -11	
SUPERSEDES		FINISH	SCALE			

SYM	REVISIONS	APPROVED	DATE

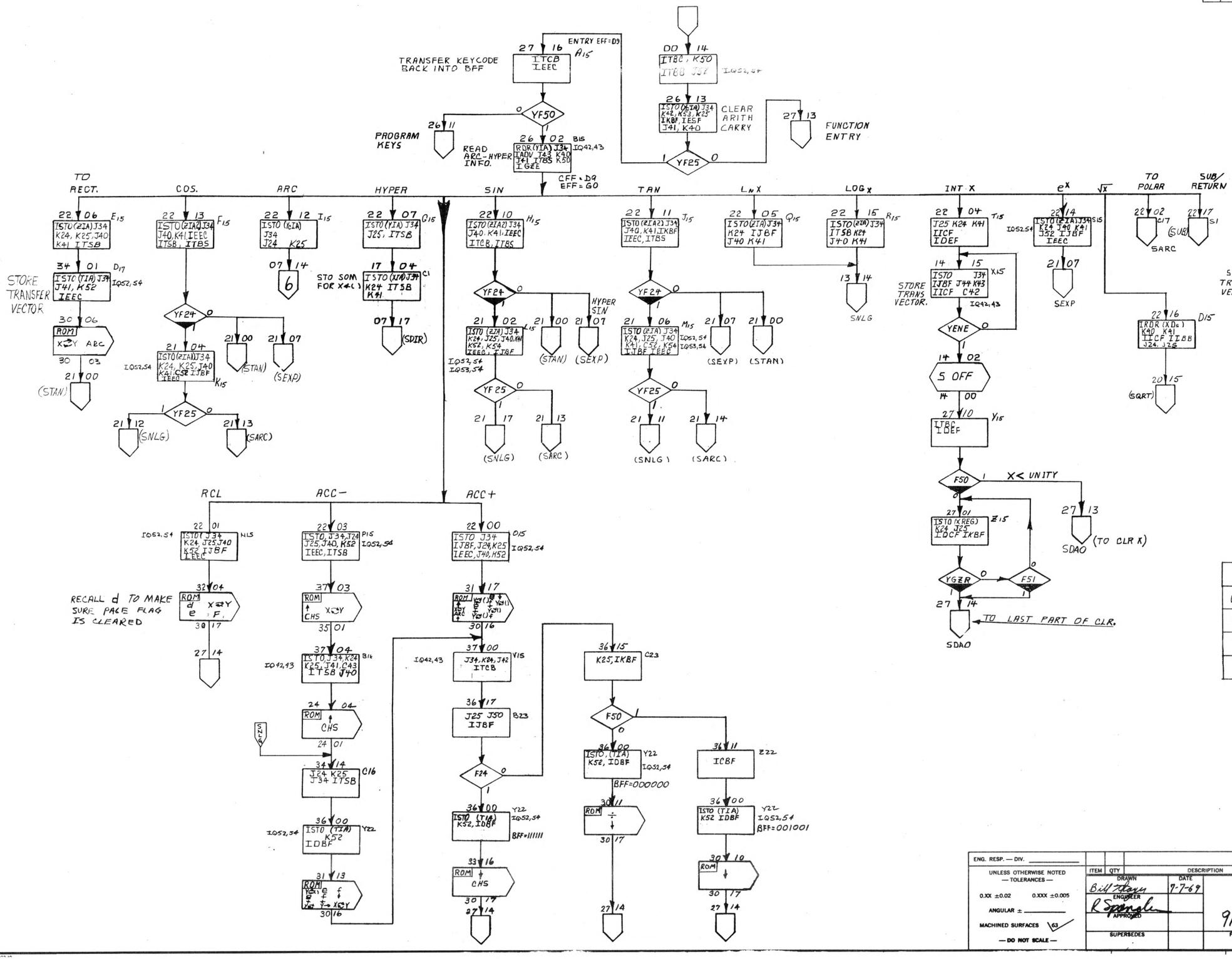

YcIA2	INITIALIZATION
000000	NO INITIALIZATION
010000	ARC
100111	HYPER (X<0)
110111	ARC-HYPER

ENG. RESP. — DIV.	ITEM	QTY	DESCRIPTION	PART NO.	DWG. NO.	MAT'L SPEC.
UNLESS OTHERWISE NOTED — TOLERANCES — 0.XX ±0.02 0.XXX ±0.005 ANGULAR ± MACHINED SURFACES 63 — DO NOT SCALE —						

DRAWN	DATE	TITLE		
Bill Tyson	9-7-69	CORDIC ENTRY SUBROUTINE 9100B		
ENGINEER R Spangle				
APPROVED				
SUPERSEDES		FINISH	SCALE	NEXT ASSY. 9100B

HEWLETT PACKARD LABORATORY INSTRUMENTS

D-09100-90370-12

SYM	REVISIONS	APPROVED	DATE

D-09100-90370-13

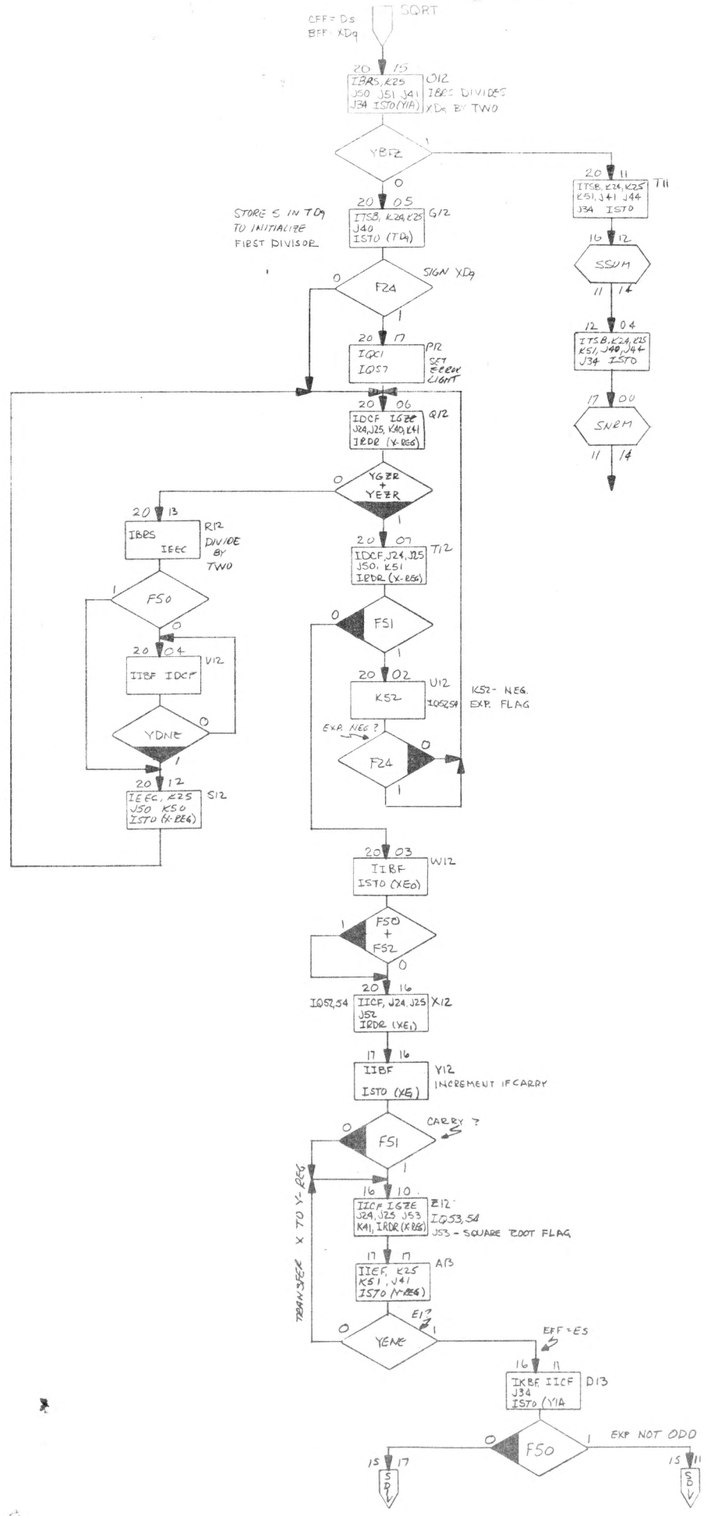

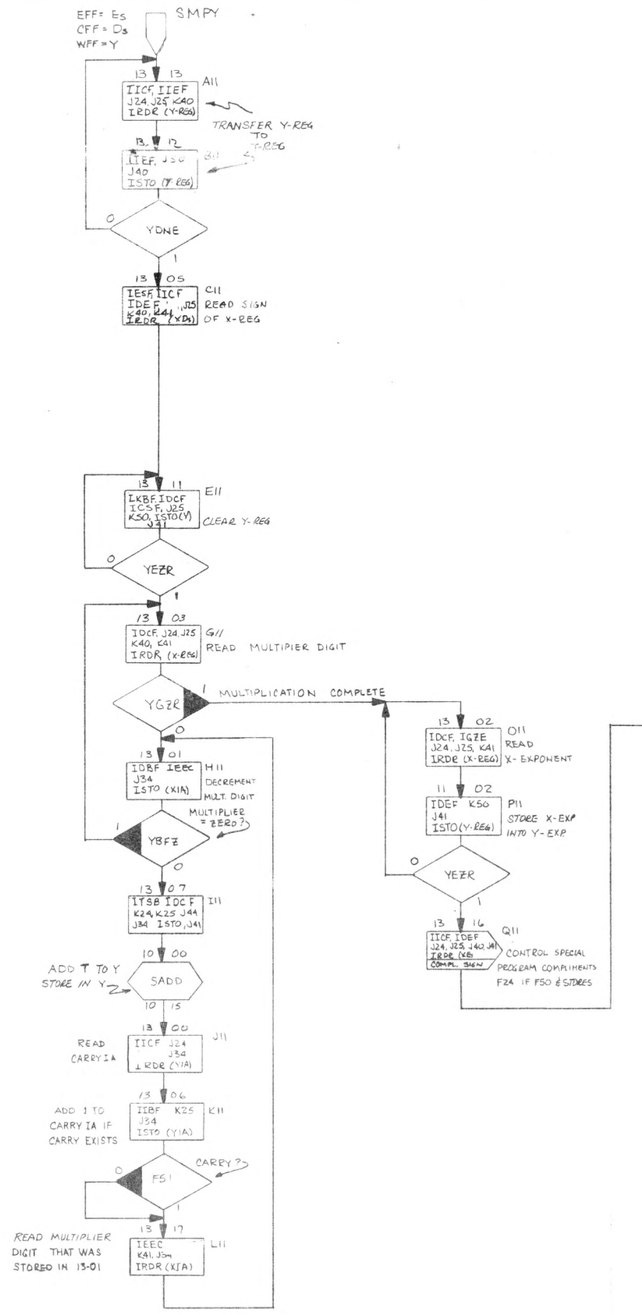

ENG. RESP. — DIV.						
UNLESS OTHERWISE NOTED — TOLERANCES —	ITEM	QTY	DESCRIPTION	PART NO.	DWG. NO.	MAT'L SPEC.
0.XX ±0.02 0.XXX ±0.005	DRAWN JOHN SCOHY	DATE 9-2-69	TITLE SUBROUTINE — SQUARE ROOT		NEWLETT PACKARD	
ANGULAR ±	ENGINEER RICK SPANGLER		SUBROUTINE — MULTIPLY		LABORATORY INSTRUMENTS	
MACHINED SURFACES 63	APPROVED				NEXT ASSY. 91008	
— DO NOT SCALE —	SUPERSEDES		FINISH	SCALE	D-09100-90370-13	

HP 3280-0004 PRINTED IN U.S.A. 1020-16

SYM	REVISIONS	APPROVED	DATE

FLAGS: Z_cIA1 → QUADRANT INFORMATION
Z_cIA2 → FUNCTION; 0_8 — TAN, 11_8 — SIN, 13_8 — COS, 06_8 — TO RECT, 15_8 — LOGX, 17_8 — LNX, E^X.
Y_cIA2 → PREFIX KEYS; $01\cdots00_8$ — ARC, $10_8\cdots07_8$ — HYPER.

QUADRANT INFORMATION:
1. SIGN OF TAN FOR PROPER QUADRANT IS IN F24.
2. SIGN OF COS FOR PROPER QUADRANT IS IN F21.
3. IF ROTATED BY ODD NO. OF TIMES, FINDING THE COMPLIMENT OF THE ANGLE, INDICATED BY F25.

CFF = 16_8
EFF = 11_8
WFF = 01001
FSZ = 1

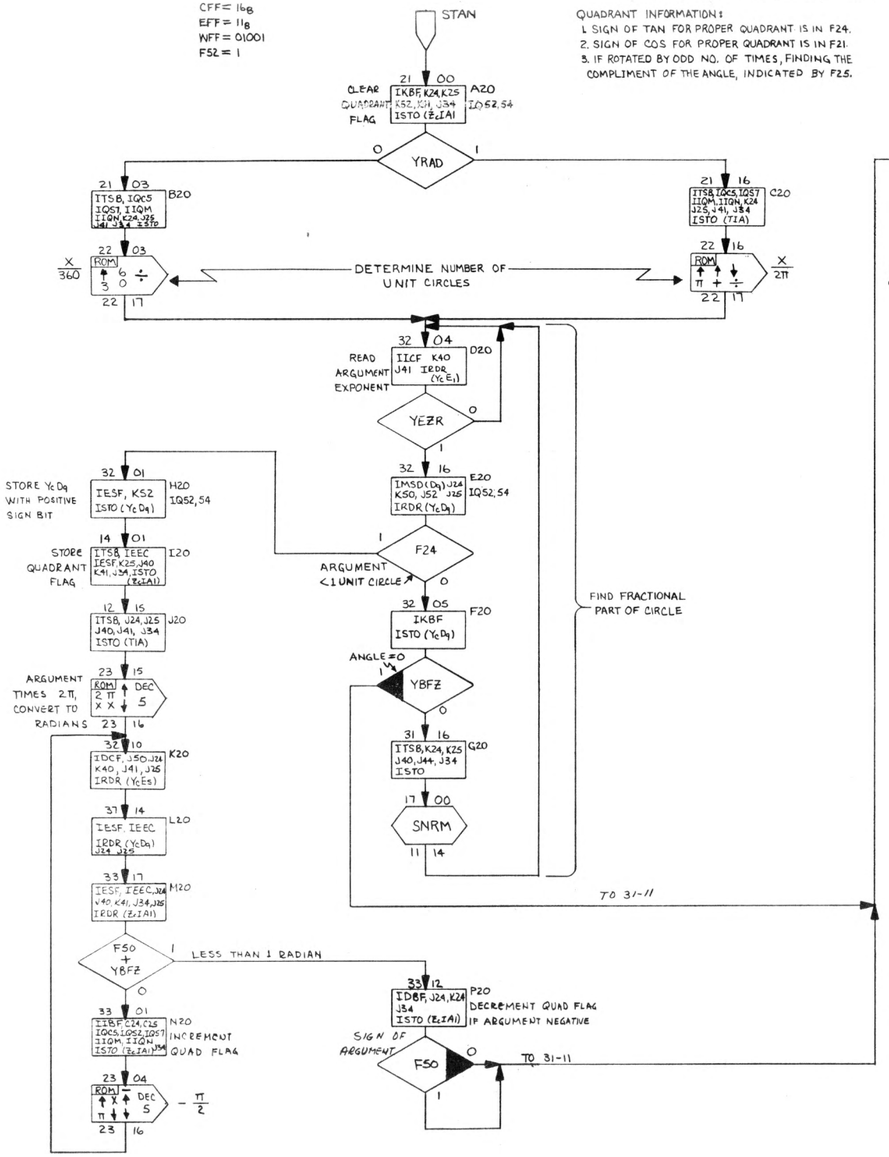

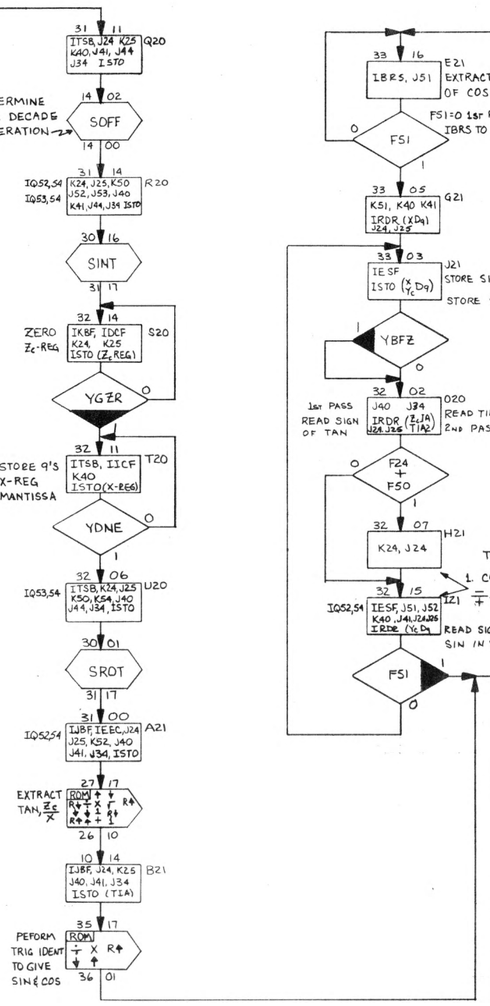

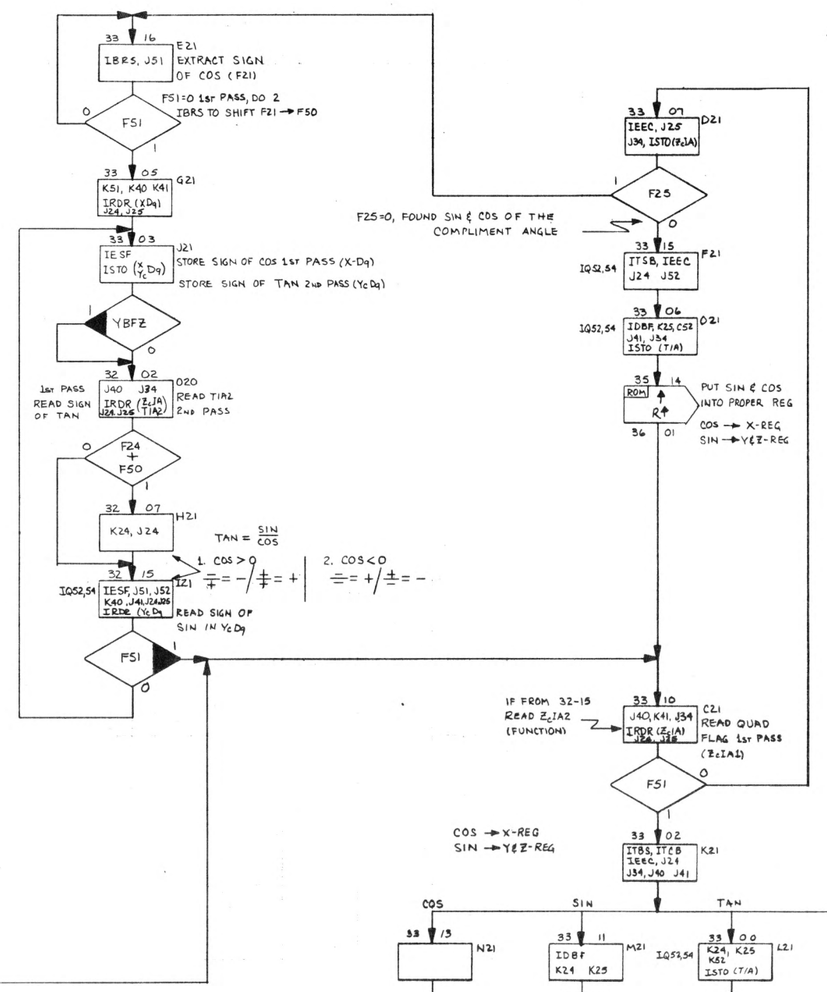

ENG. RESP. — DIV.						
UNLESS OTHERWISE NOTED — TOLERANCES — 0.XX ±0.02, 0.XXX ±0.005, ANGULAR ±, MACHINED SURFACES 63, — DO NOT SCALE —	ITEM	QTY	DESCRIPTION	PART NO.	DWG. NO.	MAT'L SPEC.
DRAWN JOHN SCOHY	DATE 8-28-69	TITLE FLOW CHART - TANGENT ROUTINE				
ENGINEER RICK SPANGLER						
APPROVED						
SUPERSEDES		FINISH	SCALE	NEXT ASSY. 9100B	D-09100-90370-14	

HEWLETT PACKARD
LABORATORY INSTRUMENTS

SYM	REVISIONS	APPROVED	DATE

D-09100-90370-15

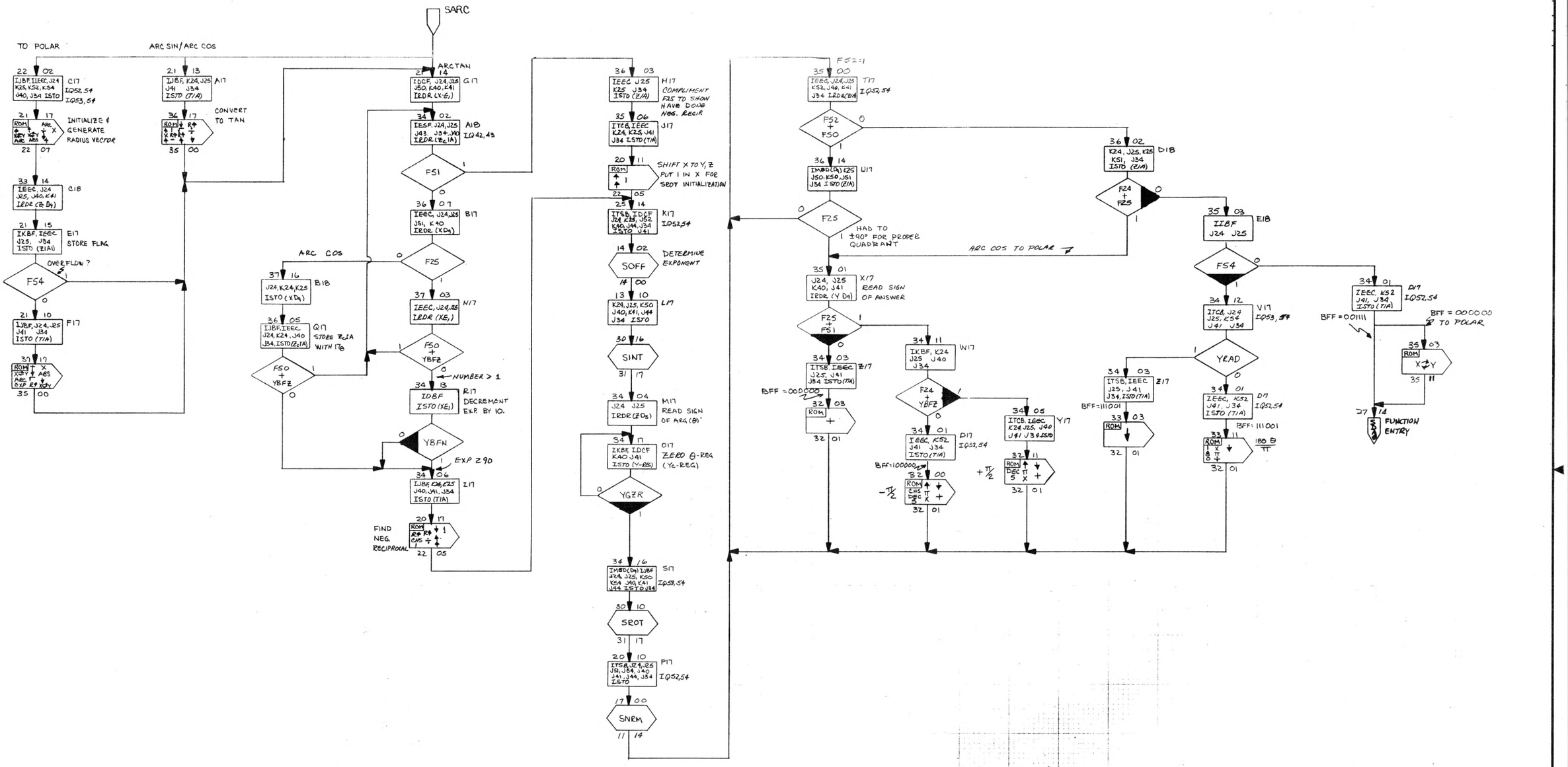

ENG. RESP. — DIV.	ITEM	QTY	DESCRIPTION	PART NO.	DWG. NO.	MAT'L SPEC.
UNLESS OTHERWISE NOTED — TOLERANCES — 0.XX ±0.02 0.XXX ±0.005 ANGULAR ± MACHINED SURFACES 63 — DO NOT SCALE —						

DRAWN	DATE	TITLE		
JOHN SCOHY	8-29-69	SUBROUTINE — ARC TANGENT		HEWLETT PACKARD LABORATORY INSTRUMENTS
ENGINEER RICK SPANGLER				NEXT ASSY. 91008
APPROVED				D-09100-90370-15
SUPERSEDES		FINISH	SCALE	

SYM	REVISIONS	APPROVED	DATE

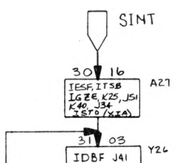

SINT			
EXP OFFSET CFF ON ENTRY	$Y_{E}A2$	$Y_{C}A1$	$Y_{E}A2$
D_9	16	14	15
D_8	16	16	16
D_7	16	06	17
D_6	16	02	00
D_5	16	04	01
D_4	16	06	02
D_3	16	10	03
D_2	16	11	04
D_1	16	11	05
D_0	16	11	06
G_1	16	11	07
G_0	16	11	10
E_5	16	11	11

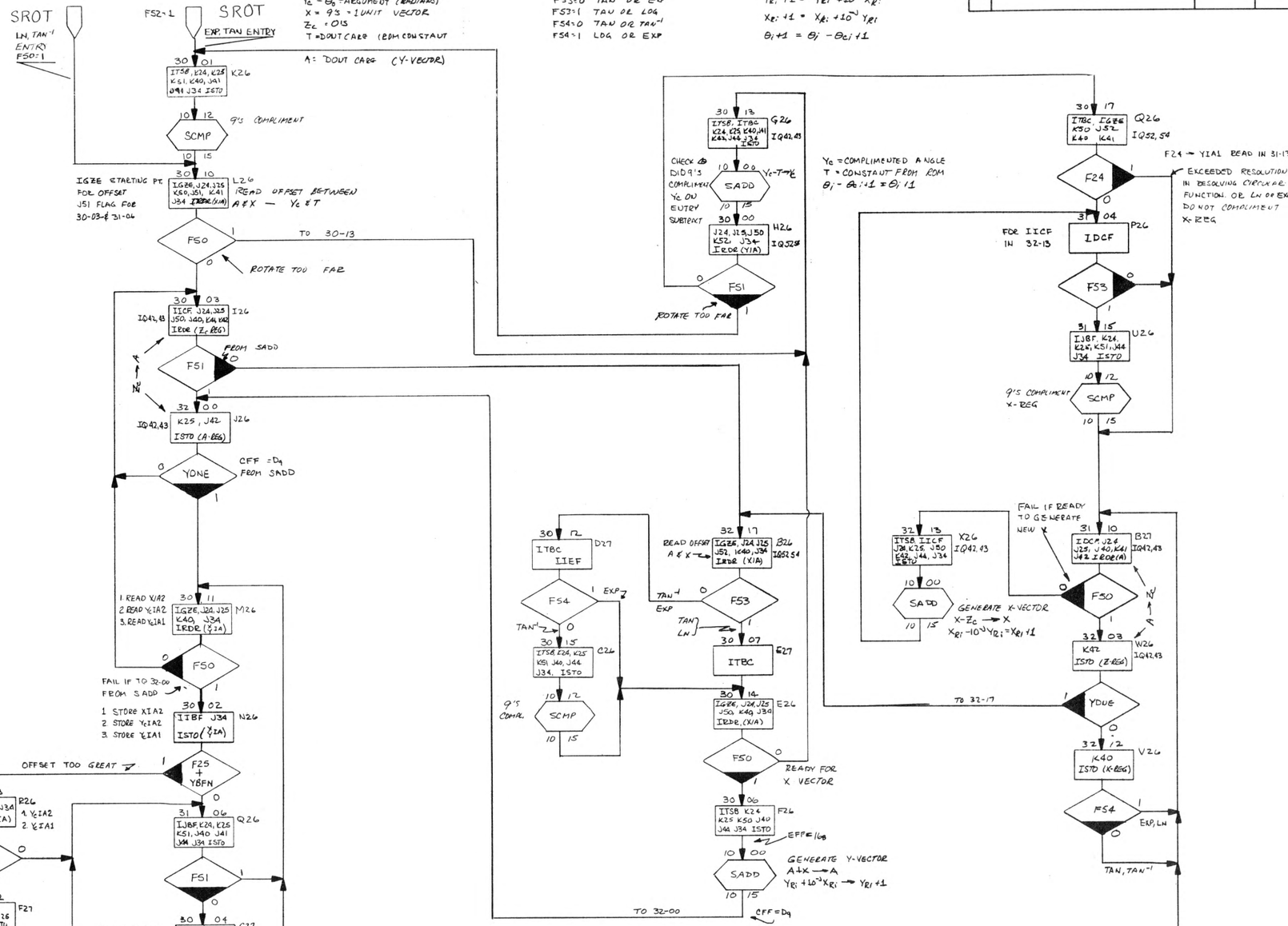

SADD	FUNCTION	REGISTER
SADD 30-06	TAN	Y: A+X → A
SADD 32-B	$\theta \rightarrow 0$	X: $X - Z_\theta \rightarrow X$
SADD 30-13		Θ: $Y_C - T \rightarrow Y$
	TAN^{-1}	Y: $A - Y_E \rightarrow A$
	$Y \rightarrow 0$	X: $X + Z_E \rightarrow X$
		Θ: $Y_E + T \rightarrow Y_C$
	EXP	e^θ: A+X → A
	$\Theta \rightarrow 0$	Θ: $Y_C - T \rightarrow Y_E$
	LN	e^θ: A+X → A
	$e^\theta \rightarrow 1$	Θ: $Y_C - T \rightarrow Y_E$

SROT CALLED BY

TAN → RESOLVES Y_C-REG TO ZERO, INCREMENTS Z_C-REG FROM ZERO, DECREMENTS X-REG FROM ALL 9'S (1).

TAN^{-1} → INCREMENTS Y_C-REG FROM ZERO, RESOLVES Z_C TO ZERO, INCREMENTS X-REG FROM ONE (1).

EXP → RESOLVES Y_C-REG TO ZERO, INCREMENTS X-REG UP FROM ONE (1).

LN → RESOLVES X-REG UP TO ONE (1) INCREASING Y_C-REG.

ENG. RESP. — DIV.

UNLESS OTHERWISE NOTED — TOLERANCES —
0.XX ±0.02 0.XXX ±0.005
ANGULAR ±
MACHINED SURFACES 63
— DO NOT SCALE —

ITEM	QTY	DESCRIPTION	PART NO.	DWG. NO.	MAT'L SPEC.

DRAWN	DATE	TITLE	NEWLETT PACKARD
JOHN SCOHY	9-2-69	SUBROUTINE- ROTATE	LABORATORY INSTRUMENTS
ENGINEER		SUBROUTINE INITIALIZE	
RICK SPANGLER	9-2-69		NEXT ASSY. 9100B
APPROVED			D-09100-90370-16
SUPERSEDES		FINISH / SCALE	

SYM	REVISIONS	APPROVED	DATE

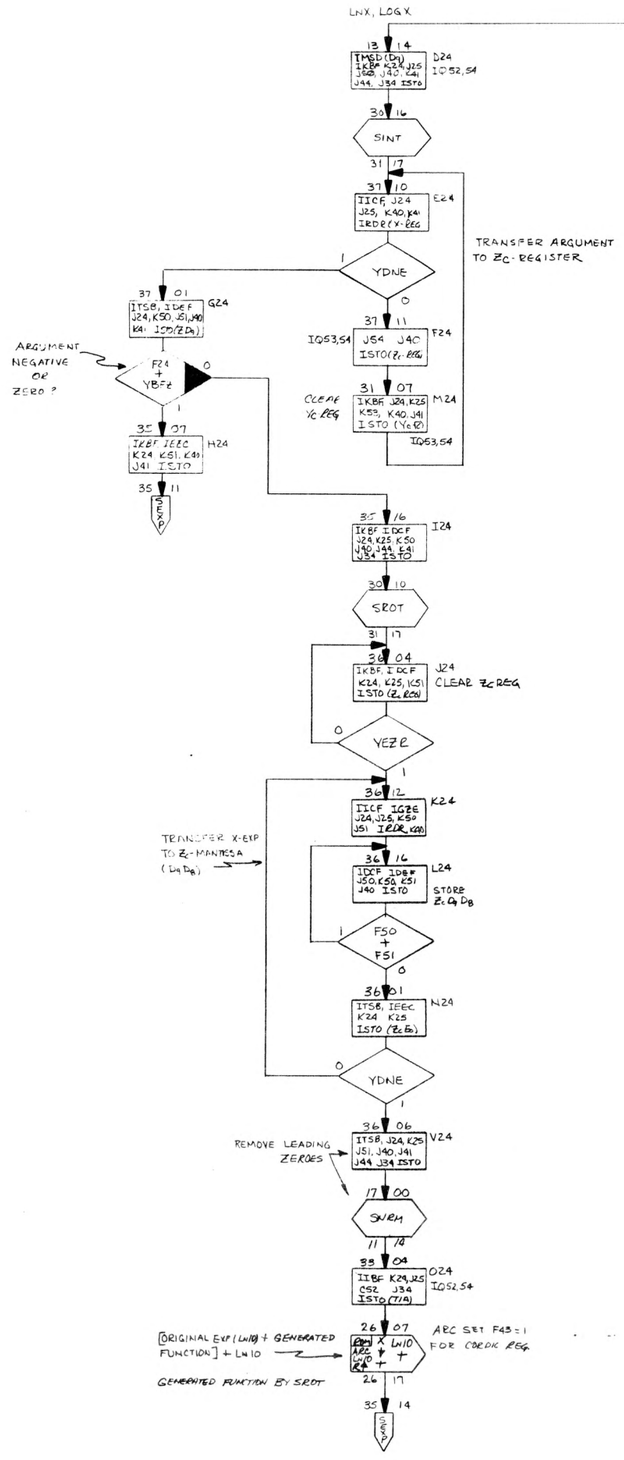

ENG. RESP. — DIV.						
UNLESS OTHERWISE NOTED — TOLERANCES — 0.XX ±0.02 0.XXX ±0.005 ANGULAR ± MACHINED SURFACES 63 — DO NOT SCALE —	ITEM	QTY	DESCRIPTION	PART NO.	DWG. NO.	MAT'L SPEC.
DRAWN JOHN SCOHY DATE 8-29-69 ENGINEER RICK SPANGLER APPROVED SUPERSEDES	TITLE SUBROUTINE NATURAL LOG			FINISH	SCALE	HEWLETT PACKARD LABORATORY INSTRUMENTS NEXT ASSY. 9100B D-09100-90370-17

D-09100-90370-18

SYM	REVISIONS	APPROVED	DATE

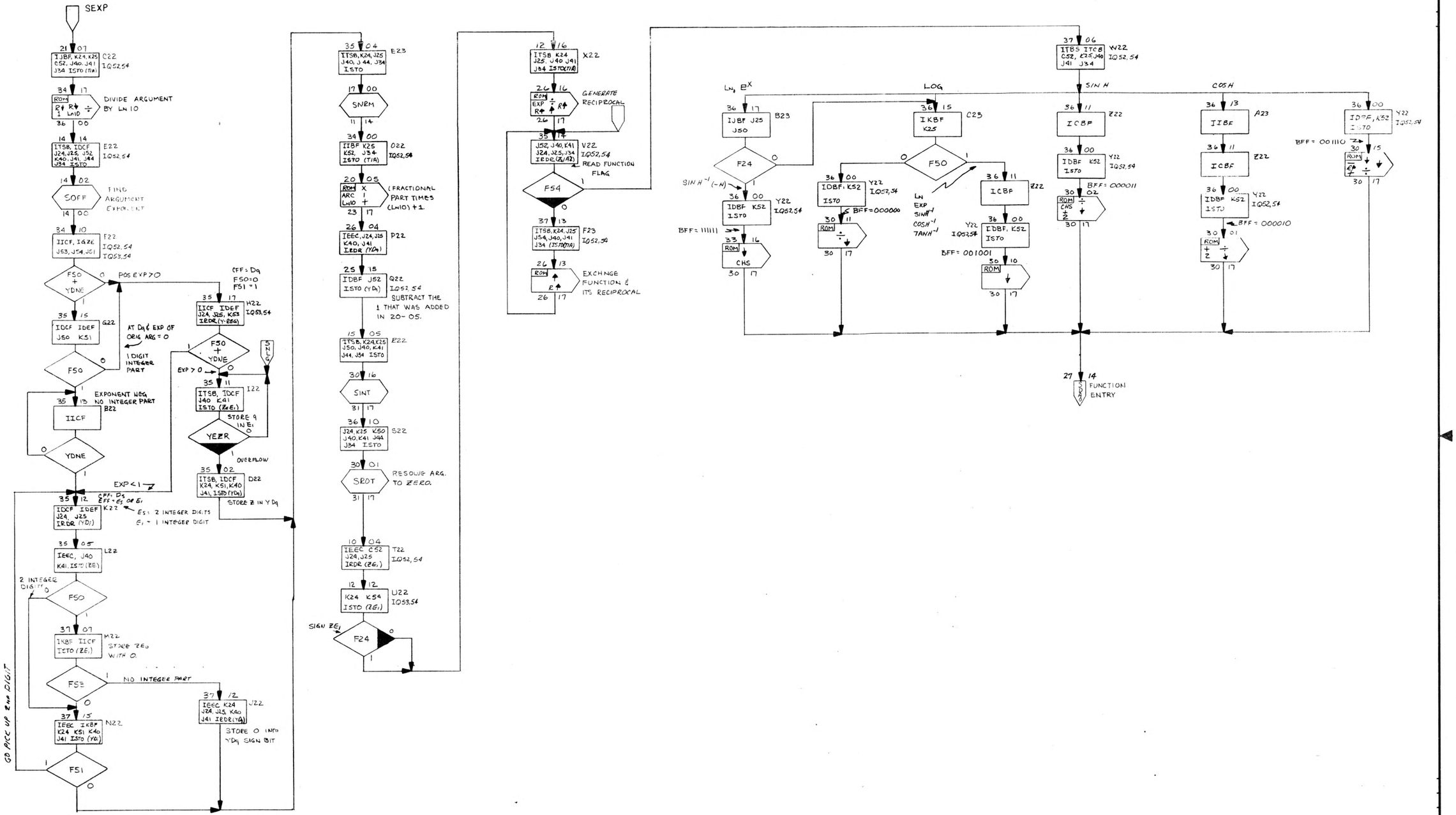

ENG. RESP. — DIV.						
UNLESS OTHERWISE NOTED — TOLERANCES — 0.XX ±0.02 0.XXX ±0.005 ANGULAR ± MACHINED SURFACES 63 — DO NOT SCALE —	ITEM	QTY	DESCRIPTION	PART NO.	DWG. NO.	MAT'L SPEC.
	DRAWN JOHN SCOHY	DATE 8-29-69	TITLE SUBROUTINE EXPONENTIAL		NEWLETT PACKARD LABORATORY INSTRUMENTS	
	ENGINEER RICK SPANGLER				NEXT ASSY. 91008	
	APPROVED				D-09100-90370-18	
	SUPERSEDES		FINISH	SCALE		

9100B

B-09100-90370-19

SYM	REVISIONS	APPROVED	DATE

SECONDARY ADDRESS →

PRIMARY ADDRESS ↓

	00	01	02	03	04	05	06	07	10	11	12	13	14	15	16	17	
20	RTN 3317	+	1	X	LN10	ARC	RTN 2205	1	↑	↑	↓	÷	R↑	1	CHS	R↓	I17 J17 O22
21	RTN 2706	X	↑	↑	RTN 2207	X	↑	↓	÷	ARC	ABS	x⇄y	↑	ARC	x⇄y	↑	C17 O24 O22
22	0	6	3	↑		2514	3510	3314	RTN 2217	÷	↓	+	↑	π	↑	3204	C20 B20
23	—	↓	X	π	↑	RTN 2316	5	DEC	↓	↑	X	π	X	2	3210	2604	I20 O20
24	3714	3414	RTN 2401	CHS	↑	LN	√	↓	÷	↓	—	R↑	+	1	↑	↑	C24 B16
25	1314	RTN 2500	↓	+	ABS	R↑	√	↓	+	1	3510	RTN 2512	CHS	X	↑	↑	A24 Y24 X24
26	+	LN10	+	↓	X	R↑	LN10	ARC	1014	RTN 2617	R↑	↑	÷	R↑	EXP	3514	X22 F23 O24
27	RTN 2610	R↑	1	R↓	√	↓	+	1	X	↑	↑	↓	÷	R↑	↓	R↓	A21
30	2	+	CHS	2100	RTN 3003	ARC	x⇄y	RTN 3017	↓	÷	↓	+	R↑	—	3700	2714	Y22 M21 A23 C23 L21 Z22 B23
31	RTN 3016	x⇄y	↓	f	y→()	+	f	⊟	y⇄()	+	⊟	y⇄()	↑	ARC	x⇄y	↑	O15 Y22
32	CHS	3500	RTN 3201	+	↓	X	π	↑	5	DEC	2600	RTN 3017	f	x⇄y	⊟	d	N15 Y17
33	RTN 3017	x⇄y	RTN 3201	↓	÷	π	X	0	8	1	RTN 3212	—	RTN 3017	CHS	↓	↑	B24 Z17 D17
34		RCL	SET FLAG	↑	x⇄y	f	STO	⊟	STO	CLR X	RTN 3600	÷	LN10	R↓	1	R↓	C22 O21
35	2114	3704	RTN 3511	x⇄y	↓	X	ARC	X	x⇄y	2714	RTN 3601	R↑	↑	X	↓	÷	B21 O21
36	1414	3310	RTN 3500	↓	÷	R↑	↑	R↑	√	↓	—	R↑	1	↑	X	↑	A17
37	3501	x⇄y	CHS	↑	RTN 3500	x⇄y	↓	ABS	X	R↑	√	↓	+	EXP	ARC	x⇄y	F17 P15

ENG. RESP. — DIV. _____

UNLESS OTHERWISE NOTED
— TOLERANCES —
0.XX ±0.02 0.XXX ±0.005
ANGULAR ± _____
MACHINED SURFACES 63
— DO NOT SCALE —

ITEM	QTY	DESCRIPTION	PART NO.	DWG. NO.	MAT'L SPEC.

DRAWN: AL HOWARD — DATE: 5/29/9
ENGINEER: R Spangler
APPROVED:
SUPERSEDES:

TITLE: ROM PROGRAM STEPS 9100B

FINISH: | SCALE:

HEWLETT hp PACKARD
LABORATORY INSTRUMENTS

NEXT ASSY. 9100B

B-09100-90370-19

9100B

SYM	REVISIONS	APPROVED	DATE

B-09100-90370-20

SECONDARY ADDRESS

PRIMARY ADDRESS	00	01	02	03	04	05	06	07	10	11	12	13	14	15	16	17
00	0	1	2	3	4	5	6	7	8	9	—	a	b		c	d
01	0	1	2	3	4	5	6	7	8	9	—	a	b	DEC	c	d
02	3	1	4	1	5	9	2	6	5	3	6	0	0(2)	0(2)	π	RIGHT HALF BLANK
03	←				FAST	ADD				→						LEFT HALF BLANK
04	L7 14-10	K-26 30-10		P7 17-00	T7 06-14	R-22 36-10	F26 32-00	I11 13-00	E9 J9 11-04	T11 13-04	D9 10-10	G26 30-00	H13 15-00	C26 30-14	G20 32-04	Q26 U26 31-10
05	I24 36-04			P7 12-14		S22 10-04	V24 33-04		E9 12-10	Q20 31-14		X26 31-04	K17 13-10	G13 15-14		U5 06-14
06	D24 37-10				E23 34-00	E23 35-04	U20 31-00		M7 13-04	R20 32-14			L17 34-04		Y1 07-14	X15 27-10
07	00-14	14-00		M10 11-10					F18 35-00				E22 34-10			S17 20-10
10	9()	6(2)	9()	6(3) D3	6(2) D4	8 D7	6(3)	9()	6(2)	8	6	5	2	4	9	1(2)
11	9() D7	5	0(3) D9	0(3)	9()	9()	7	8	5	3	9	8	1	6	3(2)	9(2) G0
12	9()	9()	9()	9()	6	9	3	1	4	7	1	8	0	5	6	0 G0
13	9() D9	5 D9	0(2) D8	3(2)	3	0(3)	9	5 D2	3	1	0	1	7	9	8	0(3) G0
14	9() D8	9()	9()	9()	5	0	0(3)	0(3)	9()	5	0	3(2)	0	8	5	5(3)
15	9()	2	3	0	2	5	8	5	0	9	2 D5	9	9	0(2) D2	0(2)	LN 10
16	D0	D1	D2	D3	D4	D5	D6	D7	D8	D9	9() D6	9()	6(2)	6(3) D1	G0	G1
17	D0'	D1'	D2'	D3'	D4'	D5'	D6'	D7'	D8'	D9'	9()	9()	6(3)	6(3)	G0'	G0'

CHARACTER DECODE
RIGHT HALF
LEFT HALF

π

LN 10

ENG. RESP. — DIV. _____

UNLESS OTHERWISE NOTED — TOLERANCES —

0.XX ±0.02 0.XXX ±0.005

ANGULAR ± _____

MACHINED SURFACES 63

— DO NOT SCALE —

ITEM	QTY	DESCRIPTION	PART NO.	DWG. NO.	MAT'L SPEC.

DRAWN	DATE	TITLE	
AL HOWARD	5/28/9	ROM CONSTANTS TRANSFER VECTORS 9100B	HEWLETT-PACKARD LABORATORY INSTRUMENTS
ENGINEER R Spangler			NEXT ASSY. 9100B
APPROVED			
SUPERSEDES		FINISH / SCALE	B-09100-90370-20

SYM	REVISIONS	APPROVED	DATE

SECONDARY ADDRESS →

PRIMARY ADDRESS ↓

	00	01	02	03	04	05	06	07	10	11	12	13	14	15	16	17	
00	3	2, 3	2	3	2	3	2	2	3	2, 3	3	3	4, 6, 12	2	3	8	00
01	2	2	2	2	2	2	2	2	2, 3	2	2	2	2	2	2	2	01
02	2	3	2	2	2	3	2	2	2	2	2	2	2	2	2, 4, 6	2	02
03	2	2, 3	3	3	3	3	2	3	3	3	2, 3	2. 3	3	2. 3	2, 3	3	03
04	4	4	4	4, 5	4	4	4	4	5	4	4	4	4	4	4	4, 5	04
05	4	4	9	4	11	4	5	4	11	4	11	5,	5	6	4	5	05
06	5	5	4, 5	5	5	5	5	5	7	5	5	4, 5	4, 5, 9	5	5	5	06
07	4	11	5	4, 5	11	4, 5	4. 5	4.5	5	11	4	5	4, 5, 6 7. 9	4	9	3	07
10	10	10	9	10	18	9, 10	10	10	9	10	10	10	14	9, 10	10	10	10
11	10	10	13	9	9	10	9	10	10	9	9	9	9	5	9	9	11
12	9	9	4	9	9.11, 13	9	9	9	9	4	18	11	9	14	18	9	12
13	13	13	13	13	9	13	13	13	15	13	13	13	17	11	11, 13	13	13
14	9	14	9	9	6	9	9	9	9	9	9	6	18	12	9	6	14
15	11	11	11	11	11	18	11	11	11	11	11	11	11	11	11	6, 11, 12	15
16	9	10	10	10	11	10, 16	10	11	13	13	9	11	11	11	10	10	16
17	10	10	10	10	4, 12	10	10	10	10	10	10	10	10	10	13	13	17
20	5	7	13	13	13	13, 18	13	13	15	11, 13, 15	13	13	7	13	13	13, 15	20
21	14	4	12	14, 17	12	7	12	18	15	17	17	15	15	15	14	15, 17	21
22	12	12	15	12, 14	12	12	12	4, 12	12	12	12	12	12	12	12, 14	7	22
23	2	7	2	3, 17	7, 14	7	7	7	2	4, 5, 7, 9	7	4, 5, 7, 9	7	7, 14	7	4, 5	23
24	4, 6	6	6	6	6, 12	6	6	6	6	6, 12	6	6	6	6, 12	4, 6	6, 17	24
25	8	8	8	4	8	8	8	6	4	10	6	8	15	18	8	8, 17	25
26	6	8	12	8	18	8	6	8, 17	8	6	6	4, 6 18, 12	6	6	6, 18	6	26
27	6, 8	12	8	8	4	6	6	5	12	6	8	4	4	6	6	8, 14	27
30	14, 16	16, 18	16, 18	16	16	16	12, 16	16	12, 14 16. 18	12, 14 16, 18	16	16	16	16, 18	16	16	30
31	14	16	16	16	16	16	16	17	16	14	16	12, 16	14	16	14	12, 16	31
32	14, 15, 16	14	14	15, 16	12, 14	14	14	14	14	14, 15	16	16	14	14	14	16	32
33	14	14	14	14, 15	17	14	4, 14	14	14, 18	14, 15	14	6, 13	15	12, 14	12, 14	14	33
34	17, 18	12, 15	15	15	15, 17	15	15	17	18	4, 14	15	15	12	17	15, 17	15, 18	34
35	15	15	18	15	18	18	15	17	14, 17	18	18	18	14, 18	18	17	14, 18	35
36	12, 18	17	15	15	17	15	17	15	18	12, 18	17	18	15	18	17	12, 15, 18	36
37	12	17	17	12, 15	12	17	18	18	17	17	18	18	14	18	15	8, 15	37
	00	01	02	03	04	05	D6	07	10	11	12	13	14	15	16	17	

D-09100-90370-1	CONTROL LOGIC
-2	DISPLAY
-3	SDXT, SDIR, SPMD
-4	FUNCTION ENTRY
-5	DIGIT ENTRY
-6	PROG. MODE KEY
-7	SUB/RETURN
-8	SLRN
-9	SACC, SSUM, SOFF
-10	SNRM, SCMP, SADD
-11	SDIV
-12	CORDIC ENTRY
-13	SQRT, SMPY
-14	STAN
-15	SARC
-16	SROT, SINT
-17	SNLG
-18	SEXP
B-09100-90370-19.	ROM PROG STEPS
B-09100-90370-20	ROM CONSTANTS

ENG. RESP. — DIV.

UNLESS OTHERWISE NOTED — TOLERANCES — 0.XX ±0.02 0.XXX ±0.005 ANGULAR ± MACHINED SURFACES 63 — DO NOT SCALE —

ITEM	QTY	DESCRIPTION	PART NO.	DWG. NO.	MAT'L SPEC.

DRAWN JOHN SCOHY DATE 9-3-67

ENGINEER RICK SPANGLER

APPROVED

SUPERSEDES

TITLE INDEX— 9100B FLOW CHARTS

FINISH SCALE

HEWLETT PACKARD LABORATORY INSTRUMENTS

NEXT ASSY. 9100B

B-09100-90370-21